ADS1174EVM, ADS1274EVM, ADS1174EVM-PDK, and ADS1274EVM-PDK

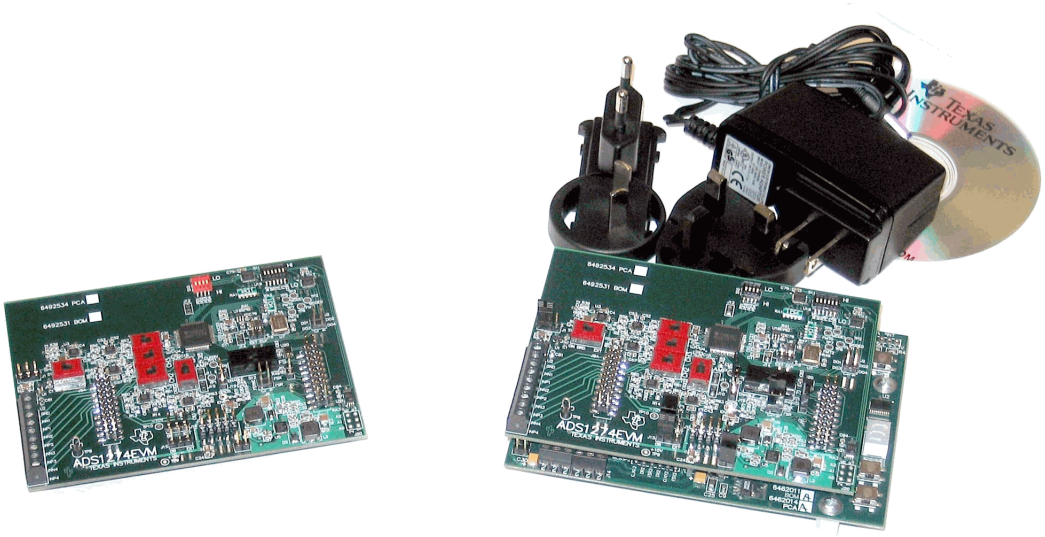

Figure 1. ADS1274EVM (Left) and ADS1274EVM-PDK (Right)

This user's guide describes the characteristics, operation, and use of the ADS1174EVM and ADS1274EVM, both by themselves and as part of the ADS1174EVM-PDK or ADS1274EVM-PDK. These evaluation modules (EVMs) are evaluation boards for the ADS1274, a 24-bit multi-channel, delta-sigma analog-to-digital converter (ADC), and the ADS1174, a 16-bit version of the ADS1274. The EVM allows evaluation of all aspects of the ADS1174 or ADS1274 devices. Complete circuit descriptions, schematic diagrams, and bills of material are included in this document.

The following related documents are available through the Texas Instruments web site at www.ti.com.

EVM-Compatible Device Data Sheets

Device	Literature Number	Device	Literature Number
ADS1274	SBAS367B	OPA1632	SBOS286A
ADS1174	SBAS373A	SN74LVC2G157	SCES207K
REF5025	SBOS410	TPS73018	SBVS054H
REF3125	SBVS046C	TPS65131	SLVS493B
OPA2350	SBOS099C	PCA9535	SCPS129H

ADCPro is a trademark of Texas Instruments.
Microsoft, Windows are registered trademarks of Microsoft Corporation.
SPI is a trademark of Motorola.
I^2C is a trademark of NXP Semiconductors.
NI-VISA is a trademark of National Instruments.
All other trademarks are the property of their respective owners.

Contents

1 EVM Overview 3
2 Analog Interface 4
3 Digital Interface 4
4 Power Supplies 6
5 Voltage Reference 7
6 Power-Down, Mode and Format Control 8
7 Clock Source 8
8 EVM Operation 9
9 ADS1274EVM-PDK Kit Operation 12
10 Evaluating Performance with the ADCPro Software 24
11 Schematics and Layout 28

List of Figures

1 ADS1274EVM (Left) and ADS1274EVM-PDK (Right) 1
2 Connector J2 5
3 Connectors J15, J16 7
4 Connector J1 7
5 Switch S1 7
6 Jumper J19 9
7 Amplifier Selection Switches 9
8 ADS1274EVM Default Jumper Locations 11
9 MMB0 Initial Setup 13
10 Connecting ADS1274EVM to MMB0 14
11 Connecting an AC Adapter 15
12 Laboratory Power-Supply Connection 16
13 NI-VISA Driver Installation 17
14 NI-VISA Driver Installation Question 18
15 NI-VISA Driver Installing 18
16 NI-VISA Driver Complete Installation 19
17 NI-VISA Driver Verification Using Device Manager 19
18 ADCPro Software Start-up Display Window 20
19 ADS1274EVM-PDK Plug-In Display Window 21
20 Install New Driver Wizard Screen 1 22
21 Install New Driver Wizard Screen 2 22
22 Install New Driver Wizard Screen 3 23
23 Install New Driver Wizard Screen 4 23
24 Install New Driver Wizard Screen 5 24
25 USBSytx Driver Verification Using Device Manager 24
26 Channel Enable 25
27 Manual Channel Control 25
28 Clock Settings and Mode 26
29 Operating Mode 26
30 Output Data Format 27
31 Progress Bar While Collecting Data 27

List of Tables

1 J9/J7:Analog Interface Pinout 4
2 J5: Serial Interface Pins 4
3 J3 Configuration: Power-Supply Input 6
4 J15 +10V Selection 6
5 J16 –10V Selection 6
6 List of Switches 11
7 Operating Modes: Clock Frequency 26

8 ADS1174EVM/ADS1274EVM Bill of Materials 28

1 EVM Overview

1.1 Features

ADS1174EVM/ADS1274EVM Features:

- Contains all support circuitry needed for the ADS1174/ADS1274
- +10V and –10V generated from the +5V supply or supplied externally
- Voltage reference options: external or onboard
- Clock options: External clock source or 27MHz onboard crystal oscillator
- GPIO access
- Compatible with the TI Modular EVM System

ADS1174EVM-PDK/ADS1274EVM-PDK Features:

- Easy-to-use evaluation software for Microsoft® Windows® XP
- Data collection to text files
- Built-in analysis tools including scope, FFT, and histogram displays
- Complete control of board settings
- Easily expandable with new analysis plug-in tools from Texas Instruments

For use with a computer, the ADS1174EVM-PDK or ADS1274EVM-PDK is available. This kit combines the ADS1174EVM/ADS1274EVM board with the DSP-based MMB0 motherboard, and includes ADCPro™ software for evaluation.

The MMB0 motherboard allows the ADS1174EVM/ADS1274EVM to be connected to the computer via an available USB port. This manual shows how to use the MMB0 as part of the ADS1174EVM-PDK/ADS1274EVM-PDK, but does not provide technical details about the MMB0 itself.

ADCPro™ is a program for collecting, recording, and analyzing data from ADC evaluation boards. It is based on a number of plug-in programs, so it can be expanded easily with new test and data collection plug-ins. The ADS1174EVM-PDK/ADS1274EVM-PDK is controlled by a plug-in running in ADCPro. For more information about ADCPro, see the ADCPro™ Analog-to-Digital Converter Evaluation Software User's Guide (literature number SBAU128), available for download from the TI web site.

This manual covers the operation of both the ADS1174EVM/ADS1274EVM and the ADS1174EVM-PDK/ADS1274EVM-PDK. Throughout this document, the abbreviation *EVM* and the term *evaluation module* are synonymous with the ADS1174EVM and the ADS1274EVM. For clarity of reading, the remainder of this manual will refer only to the ADS1274EVM or ADS1274EVM-PDK, but operation of the EVM and kit for the ADS1174 is identical, unless otherwise noted.

1.2 Introduction

The ADS1274EVM is an evaluation module built to the TI Modular EVM System specification. It can be connected to any modular EVM system interface card.

The ADS1274EVM is available as a stand-alone printed circuit board (PCB) or as part of the ADS1274EVM-PDK, which includes an MMB0 motherboard and related software. As a stand-alone PCB, the ADS1274EVM is useful for prototyping designs and firmware.

Note that the ADS1274EVM has no microprocessor and cannot run software. To connect it to a computer, some type of interface is required.

2 Analog Interface

For maximum flexibility, the ADS1274EVM is designed for easy interfacing to multiple analog sources. Samtec part numbers SSW-110-22-F-D-VS-K and TSM-110-01-T-DV-P provide a convenient 10-pin, dual-row, header/socket combination at J9. This header/socket provides access to the analog input pins of the ADS1274. Consult Samtec at http://www.samtec.com or call 1-800-SAMTEC-9 for a variety of mating connector options. These signals can also be connected to the terminal block J7.

Most of the pins on J7 and J9 are directly connected, with no filtering or protection. Use appropriate caution when handling these pins. Table 1 summarizes the pinouts for analog interfaces J9 and J7.

Table 1. J9/J7:Analog Interface Pinout

Pin Number	Signal	Description
J9.1, J7-2	A1N	AINN1, ADS1274
J9.2, J7-3	A1P	AINP1, ADS1274
J9.3, J7-4	A2N	AINN2, ADS1274
J9.4, J7-5	A2P	AINP2, ADS1274
J9.5, J7-6	A3N	AINN3, ADS1274
J9.6, J7-7	A3P	AINP3, ADS1274
J9.7, J7-8	A4N	AINN4, ADS1274
J9.8, J7-9	A4P	AINP4, ADS1274
J9.18	EXTREFN	External Reference source input (– side of differential input)
J9.20	EXTREFP	External Reference source input (+ side of differential input)
J9.10-16 (even)	Unused	
J9.15	Unused	
J9.9-19 (odd), J7-1	AGND	Analog ground connections (except J1.15)

3 Digital Interface

3.1 Serial Data Interface

The ADS1274EVM is designed to easily interface with multiple control platforms. Samtec part numbers SSW-110-22-F-D-VS-K and TSM-110-01-T-DV-P provide a convenient 10-pin, dual-row, header/socket combination at J5. This header/socket provides access to the digital control and serial data pins of the ADC. Consult Samtec at http://www.samtec.com or call 1-800-SAMTEC-9 for a variety of mating connector options.

All logic levels on J5 are 3.3V CMOS, except for the I^2C™ pins. These pins conform to 3.3V I^2C rules. Table 2 describes the J5 serial interface pins.

Table 2. J5: Serial Interface Pins

Pin No.	Pin Name	Signal Name	I/O Type	Pullup	Function
J5.1	CNTL	SYNC	In	High	
J5.2	GPIO0	MODE0	In	High	
J5.3	CLKX	SCLK	In	None	ADS1274 SPI™ clock
J5.4	DGND	DGND	In/Out	None	Digital Ground
J5.5	CLKR	CLKR	Out	None	SCLK clock
J5.6	GPIO1	MODE1	In	High	
J5.7	FSX	/DRDY/FSYNC	In/Out	Low	
J5.8	GPIO2	FORMAT0	In	High	

Table 2. J5: Serial Interface Pins (continued)

Pin No.	Pin Name	Signal Name	I/O Type	Pullup	Function
J5.9	FSR	/DRDY/FSYNC	In/Out	None	
J5.10	DGND	DGND	In/Out	None	Digital Ground
J5.11	DX	DIN	In	None	ADS1274 SPI data in
J5.12	GPIO3	FORMAT1	In	High	
J5.13	DR	DOUT1	Out	None	ADS1274 data out
J5.14	GPIO4	FORMAT2	In	None	
J5.15	/INT	/DRDY/FSYNC	Out	None	
J5.16	SCL	SCL	I^2C	n/a	I^2C clock
J5.17	TOUT	CLK	In	None	Can be used to provide a clock from a processor
J5.18	DGND	DGND	In/Out	None	Digital Ground
J5.19	GPIO5	CLK Select		None	
J5.20	SDA	SDA	I^2C	n/a	I^2C data

Many pins on J5 have weak pull-up/pull-down resistors. These resistors provide default settings for many of the control pins. Many pins on J5 correspond directly to ADS1274 pins. See the ADS1274 product data sheet for complete details on these pins.

3.2 Data Output

Most data communications are directed through DOUT1. The data from all eight channels can be observed on the DOUT1 pin using the TDM mode. That is the signal used by the ADS1274EVM-PDK to read back and display all the channels. All the data output signals (DOUT1 to DOUT4) can be monitored on J2. Figure 2 illustrates the pinout for J2.

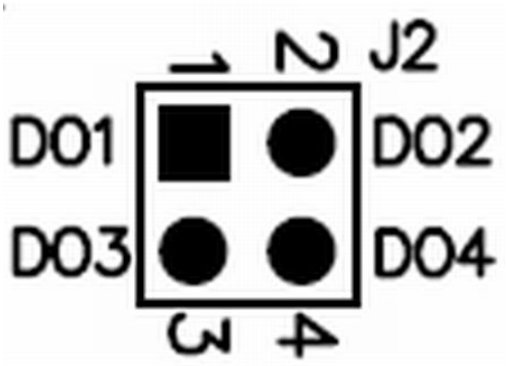

Figure 2. Connector J2

4 Power Supplies

J3 is the power-supply input connector. Table 3 lists the configuration details for J3. Analog inputs to the ADC can be applied directly to the device (see Section 8.1, *Analog Input*), bypassing the onboard amplifiers, and in this case only +5V and +3.3V are required to power the EVM. If the amplifiers are used, an additional bipolar supply is needed to power them. The EVM includes a switching power supply to generate a +10V and –10V supply. For optimum noise performance, the external supplies (+VA and –VA) should be used.

Table 3. J3 Configuration: Power-Supply Input

Pin No.	Pin Name	Function	Required
J3.1	+VA	+10V to +15V	Yes, unless onboard +10V is used.
J3.2	–VA	–10V to –15V	Yes, unless onboard –10V is used.
J3.3	+5VA	+5V analog supply	Always
J3.4	–5VA	–5V analog supply	No
J3.5	DGND	Digital ground input	Yes
J3.6	AGND	Analog ground input	Yes
J3.7	+1.8VD	1.8V digital supply	No
J3.8	+3.3VD	3.3V digital supply	Always
J3.9	VD1	Not used	No
J3.10	+5VD	+5V	Used to generate +10V/–10V

The 1.8V for DVDD comes from the voltage regulator U16 using 3.3V as the source voltage input.

All of the power supplies AVDD (+5V), DVDD (1.8V), and IOVDD (3.3V) have corresponding jumpers J10, J11(AVDD), J13(DVDD) and J14(IOVDD) that can be replaced with a current meter to measure the respective supply currents.

4.1 Bipolar Power Options

J15 and J16 require a jumper to select the voltage used by the onboard amplifiers. The external voltages can range from 10V to 15V. The onboard voltage is always 10V. Table 4 and Table 5 list the options for J15 and J16, respectively. Figure 3 shows the pinout for connectors J15 and J16.

Table 4. J15 +10V Selection

Jumper	Name	Function
1-2 (OB)	+10V	Select the +10V that is generated on the EVM
2-3 (EXT)	+VA	Select the external +VA voltage

Table 5. J16 –10V Selection

Jumper	Name	Function
1-2	–10V	Select the –10V that is generated on the EVM
2-3	–VA	Select the external –VA voltage

Figure 3. Connectors J15, J16

5 Voltage Reference

The ADS1274EVM has three sources for the reference voltage. Jumper J1 can select the voltage from either the REF3125(U1) or REF5025(U2). The reference from either source is filtered and buffered by U3A. Switch S1 chooses either the onboard reference or the external reference voltage that is connected to the reference pins of J9. Figure 4 illustrates the pinout for connector J1. Figure 5 shows switch S1 as it appears on the EVM.

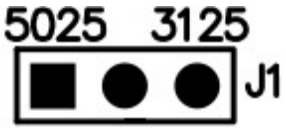

Figure 4. Connector J1

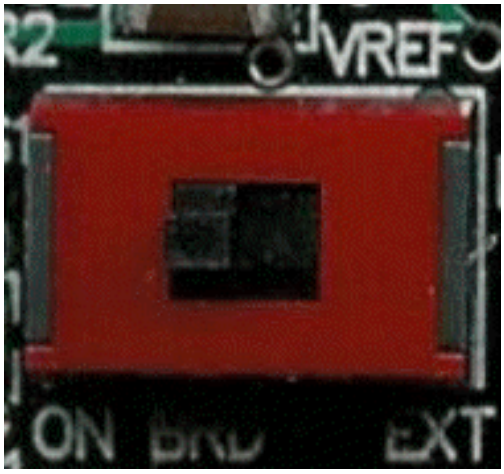

Figure 5. Switch S1

6 Power-Down, Mode and Format Control

The ADS1274 has several pins to control power-down of individual channels, and mode and format for the digital interface. These pins are controlled on the EVM either through software or hardware (using switches S10 and S11).

For users of the ADS1274EVM as a stand-alone module, these pins may be pulled high or low through DIP switches S10 and S11. Refer to the ADS1274 product data sheet for complete details on these pins and which state sets which options.

For use in the ADS1274EVM-PDK, the state of these pins is controlled by software, using the I^2C port expander on the EVM. When used in the ADS1274EVM-PDK, DIP switches S10 and S11 must all be switched so that they are down, toward the center of the board. The ADS1274EVM-PDK software will check at startup to verify that these switches are set correctly, and will generate an error message if they are not. However, it cannot detect if the switches are changed after startup.

CAUTION

When using the EVM as part of the ADS1274EVM-PDK, DIP switches S10 and S11 must all be switched so that they are down, toward the center of the board. Failure to do so may damage the EVM.

7 Clock Source

The ADS1274 clock can come from one of several sources: the onboard 27MHz crystal oscillator, a clock supplied by a processor on the TOUT pin (J5.17), or an external clock source connected to J18.1 (ground) and J18.2 (signal).

If the onboard 27MHz oscillator is selected, the device can be run in the high-speed mode, the high-resolution mode, the low-power mode, or low-speed mode with CLKDIV set to 1. If the performance of the device must be explored with CLKDIV set to 0 in the low-power and low-speed modes, an external clock must be provided to the board, either using the TOUT connection or having an external clock source connected to J18. The same is true if frequencies other than the 27MHz provided by the onboard oscillator must be investigated.

7.1 Usage in PDK

If using the ADS1274EVM as part of the ADS1274EVM-PDK, J19 should not have any pins shorted. Remove any shorting blocks on jumper J19. The ADS1274EVM-PDK software will allow selection of the clock source under software control (this option is accomplished by using port 05 of the I^2C expander U17). The software allows selection of the onboard 27MHz oscillator, or a clock provided by a PLL on the MMB0 which directly drives the appropriate CLK pins of the interface, or an external, customer supplied clock. If an external clock is selected with the software, this clock must be provided on J18. Note that if the external clock is selected and no clock is provided, the software may hang waiting for data from the converter.

7.2 Usage as a Stand-Alone EVM

If using the EVM in your own system and not with the PDK hardware and software, observe the following recommendations:

- J17 should be removed if the external clock source is used and the TOUT pin is still driven by a processor in order to avoid conflicts.
- Jumper J19 can be used to always select the 27MHz crystal (IOVDD position) or allow the onboard/external clock selection to be controlled by GPIO5 (J5.19) as shown in Figure 6.

Figure 6. Jumper J19

8 EVM Operation

The following section provides information on the analog input, digital control, and general operating conditions of the ADS1274EVM.

8.1 Analog Input

The analog input sources (channels 1-4) can be applied directly to J9 (top or bottom side) or through signal-conditioning modules available for the the modular EVM system. Terminal block J7 is connected in parallel with the analog signal connections to J9.

Each input signal can be selected to connect directly to the analog inputs of the ADS1274 or they can use the OPA1632 buffers that are provided. Switches S2-5 can be switched away from the ADS1274 to select the Terminal Block (TBK) or towards the ADS1274 to select the Amplifier (AMP) for the analog inputs 1 through 4 as shown in Figure 7.

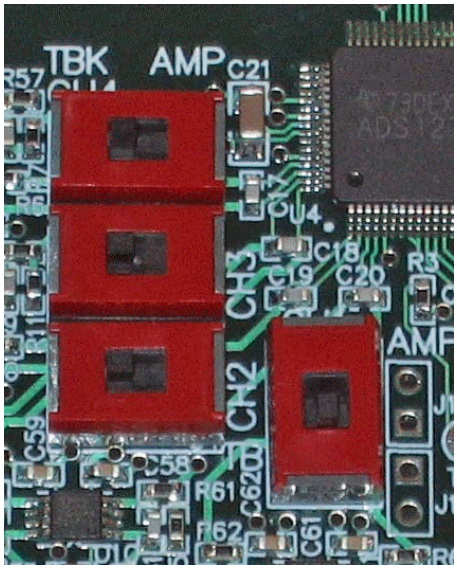

Figure 7. Amplifier Selection Switches

8.2 Digital Control

The digital control signals can be applied directly to J5 (top or bottom side). The modular ADS1274EVM can also be connected directly to a DSP or microcontroller interface board, such as the 5-6KINTERFACE or HPA-MCUINTERFACE boards available from Texas Instruments, or the MMB0 if purchased as part of the ADS1274EVM-PDK. For a list of compatible interface and/or accessory boards for the EVM or the ADS1274, see the relevant product folder on the TI web site. Some of the digital signals are controlled directly with pins on J5. Other signals such as the Power Down controls can only be controlled with slide switches or by U17 and U18 that are set up and read using the I^2C signals on pins 16 and 18 of J5. The Format and Mode pins can be controlled by all three methods (slide switches, GPIO pins on J5, and the I^2C control from U17).

The ADS1274 allows the serial interface to be used in two different formats: an SPI-compatible mode and a frame-sync format. Switch S12 can be used to switch between these two formats. The left position, marked **SPI**, selects the SPI format. In this format, the signals are connected in this configuration:

- The SCLK input of the converter is driven by the serial port signal CLKX, pin J5.3.
- The signal from the selected source for the clock (see Section 7, *Clock Source*) is connected to the CLKR pin (J5.5) allowing the serial port of a processor to be synchronized to the converter master clock.
- The signal from the selected clock source is routed to the CLK input of the converter.
- Port P10 of the I^2C port expander U18 is connected to a logic high level, so that the position of switch S12 can be read back by software.

The right position of S12, marked **FS**, selects the frame-sync format. In this format, the signals are connected in this configuration:

- The SCLK input of the converter is driven by the serial port signal CLKR, pin J5.5.
- The signal from the selected clock source is connected to the CLKX pin (J5.3), allowing the serial port of a processor to be synchronized to the converter master clock.
- The CLK input of the converter is driven by the CLKR signal (J5.5). This connection ensures that the CLK and SCLK signals have the same phase and the correct ratio as outlined in the data sheet of the device.
- Port P10 of the I^2C port expander U18 is connected to a logic low level, so that the position of switch S12 can be read back by software.

For use in the ADS1274EVM-PDK, S12 must be in the right (FS) position, which is the default factory setting.

Switching to SPI format will allow the EVM to connect to any SPI-compatible processor that does not support the frame-sync mode. If this format is selected, keep in mind that the high-speed mode will not work at full speed (32.768MHz) because of the limitations outlined in the device product data sheet.

8.3 ADS1274EVM-PDK Power Supply

The ADS1274EVM can either be powered by an AC adapter or by applying the 5V, +10V and –10V to the connectors on the MMB0 board. The MMB0 board will provide the 5V and 3.3V to the ADS1274EVM along with the +10V and –10V signals. Because the circuitry is provided on the ADS1274EVM to generate +10V and –10V, the complete system can be powered from the supplied AC adapter that supplies +6V and 3A.

8.4 Default Jumper Settings and Switch Positions

Figure 8 shows the jumpers found on the EVM and the respective factory default conditions for each.

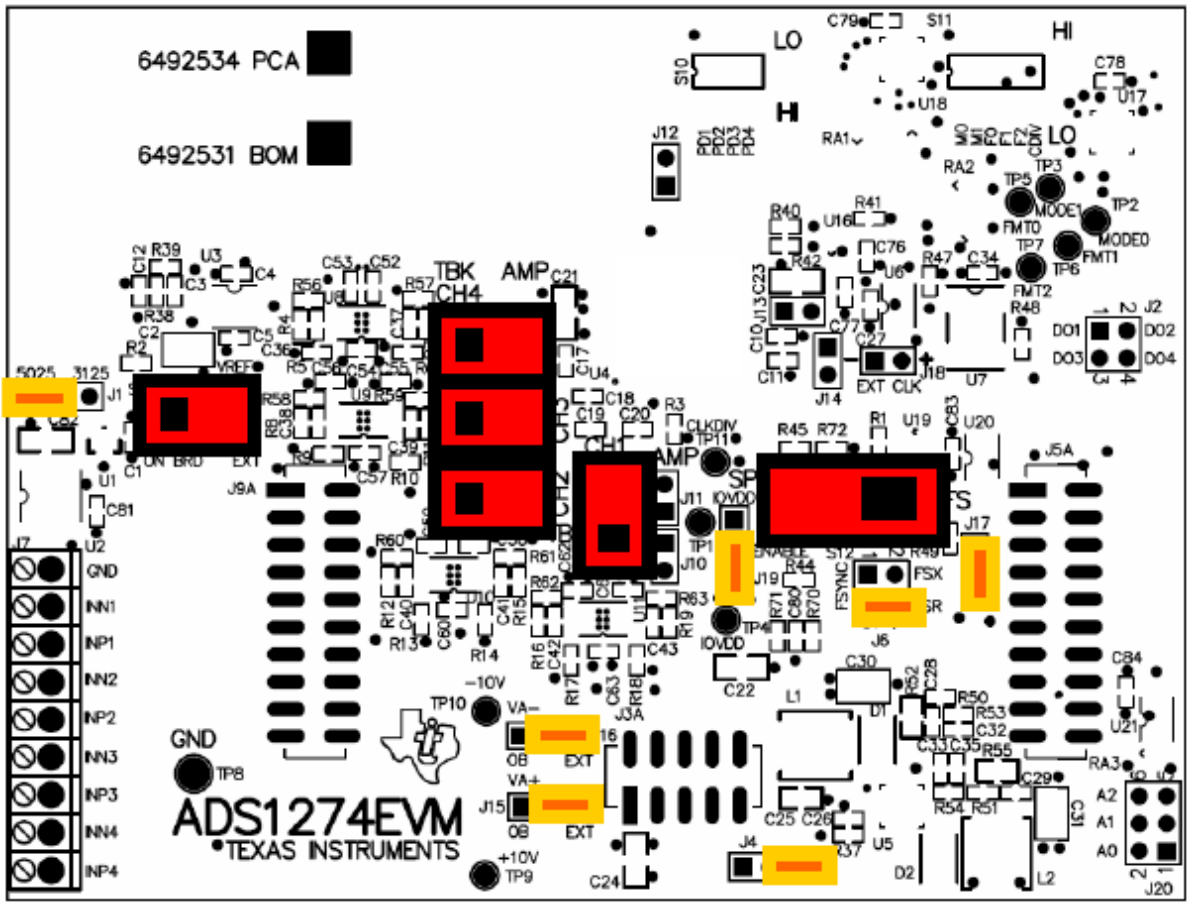

Figure 8. ADS1274EVM Default Jumper Locations

Table 6 lists the switches found on the EVM and the respective factory default conditions for each.

Table 6. List of Switches

Switch	Default Position	Switch Description
S1	Left	Onboard Reference
S2–S4	Left	A_{IN}2–4 Terminal Block (amplifiers bypassed)
S5	Down	A_{IN}1 Terminal Block (amplifiers bypassed)
S12	Right	Frame-sync format

9 ADS1274EVM-PDK Kit Operation

This section provides information on using the ADS1274EVM-PDK, including setup, program installation, and program usage.

To prepare to evaluate the ADS1274 with the ADS1274EVM-PDK, complete the following steps:

Step 1. Install the ADCPro software (if not already installed) on a PC.
Step 2. Install the ADS1274EVM-PDK EVM plug-in software.
Step 3. Set up the ADS1274EVM-PDK.
Step 4. Connect a proper power supply or use the included AC adapter.
Step 5. Complete the NI-VISA™ USB driver installation process.
Step 6. Run the ADCPro software.
Step 7. Complete the Microsoft Windows USB driver installation process.

Each task is described in the subsequent sections of this document.

9.1 Installing the ADCPro Software

CAUTION

Do not connect the ADS1274EVM-PDK before installing the software on a suitable PC. Failure to observe this caution may cause Microsoft Windows to not recognize the ADS1274EVM-PDK.

The latest software is available from the TI website at www.ti.com/. The CD-ROM shipped with the ADS1274EVM may not contain the latest software, but the ADCPro installer will check for updates when executed (if connected to the Internet), and then give you the option of downloading and installing the latest version. Refer to the ADCPro User Guide for instructions on installing and using ADCPro.

To install the ADS1274EVM-PDK plug-in, run the file: **ads1274evm-pdk-plugin-1.0.0.exe** (*1.0.0* is the version number, and increments with software version releases: you may have a different version on your CD). Double-click the file to run it; then follow the instructions shown. You can also utilize the ADCPro *Update Check* feature to check for newer versions of the ADS1274EVM-PDK plug-in, once you have installed one version of it.

The software should now be installed, but the USB drivers may not yet have been loaded by the PC operating system. This step will complete when the ADCPro software is executed; see Section 9.4, *Running the Software and Completing Driver Installation*.

9.2 Setting Up the ADS1274EVM-PDK

The ADS1274EVM-PDK contains both the ADS1274EVM and the MMB0 motherboard; however, the devices are shipped unconnected. Follow these steps to set up the ADS1274EVM-PDK.

Step 1. Unpack the ADS1274EVM-PDK kit.

Step 2. Set the jumpers and switches on the MMB0 as shown in Figure 9.

- Set the Boot Mode switch to USB.
- Connect +5V and +5VA on jumper block J13 (if +5V is supplied from J14 +5VA).
- Leave +5V and +VA disconnected on jumper block J13.
- If the PDK will be powered from an AC adapter, connect J12. If the PDK will be powered through the terminal block, disconnect J12. (See Section 9.3 for details on connecting the power supply.)

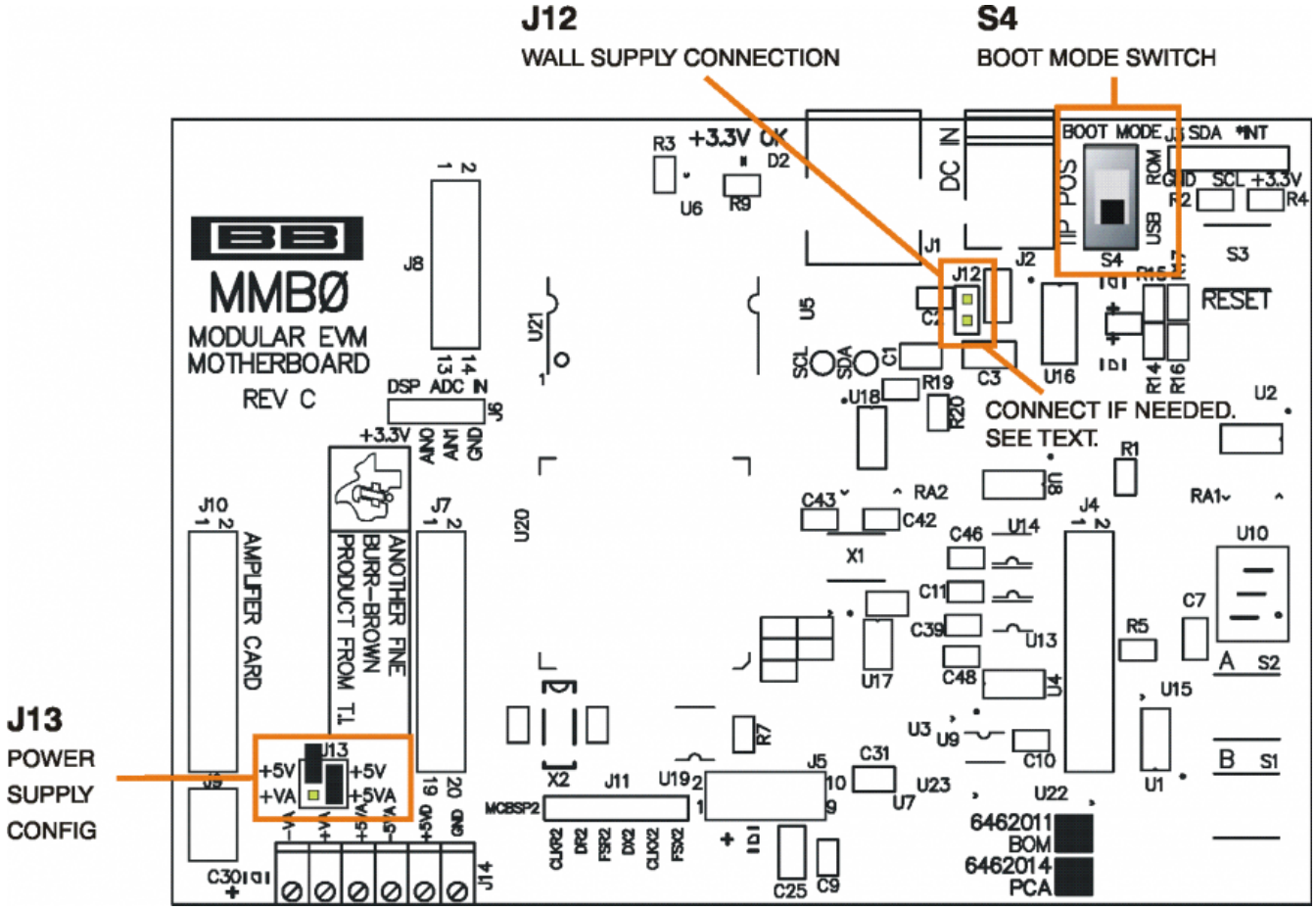

Figure 9. MMB0 Initial Setup

Step 3. Plug the ADS1274EVM into the MMB0 as Figure 10 illustrates.

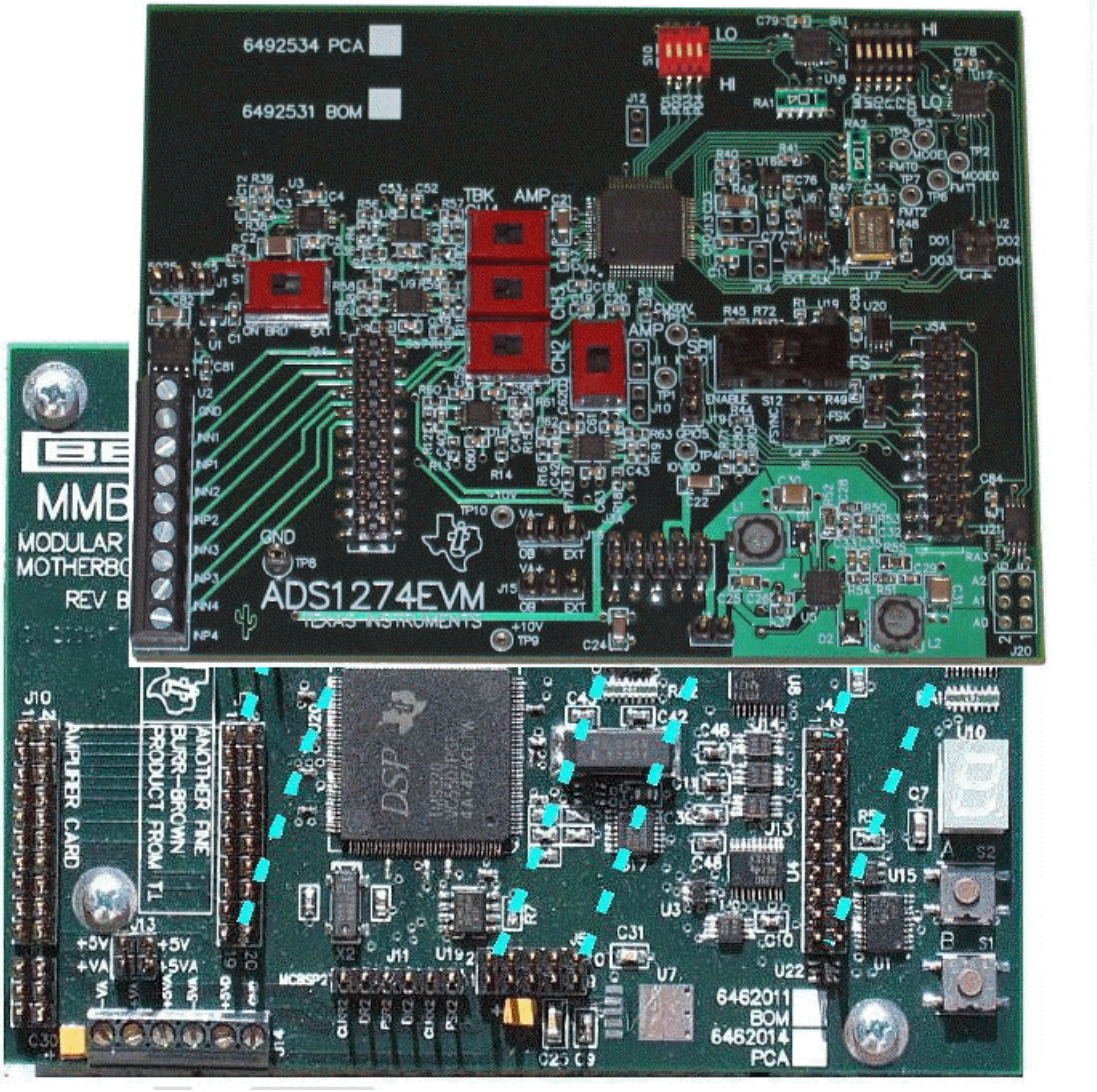

Figure 10. Connecting ADS1274EVM to MMB0

CAUTION

Do not misalign the pins when plugging the ADS1274EVM into the MMB0. Check the pin alignment carefully before applying power to the PDK.

Step 4. Set the jumpers and switches on the ADS1274EVM as shown in Figure 7 (note that these settings are the factory-configured settings for the EVM). Note that the default configuration for the EVM is to use external ±10V supplies for the input amplifiers.

9.2.1 About the MMB0

The MMB0 is a Modular EVM System motherboard. It is designed around the TMS320VC5507 , a DSP with an onboard USB interface from Texas Instruments. The MMB0 also has 16MB of SDRAM installed.

The MMB0 is not sold as a DSP development board, and it is not available separately. TI cannot offer support for the MMB0 except as part of an EVM kit. For schematics or other information about the MMB0, contact Texas Instruments.

9.3 Connecting the Power Supply

The ADS1274EVM-PDK can be operated with a unipolar +5V supply or a combination of +5V and bipolar ±(10V to 15V) supply.

When the MMB0 DSP is powered properly, LED D2 glows green. The green light indicates that the 3.3V supply for the MMB0 is operating properly. (It does **not** indicate that the EVM power supplies are operating properly.)

9.3.1 Connecting an AC Adapter

An AC adapter can be connected to barrel jack J2 on the MMB0. J2 is located next to the USB connector. The adapter must output 6V to 7V dc. The connector must be sleeve-negative, tip-positive. It should have a current rating of at least 2A.

Jumper J12 on the MMB0 connects a wall-mounted power supply to the board. To use the wall-mount supply, J12 must be shorted. Figure 11 illustrates how to connect an AC adapter to the MMB0.

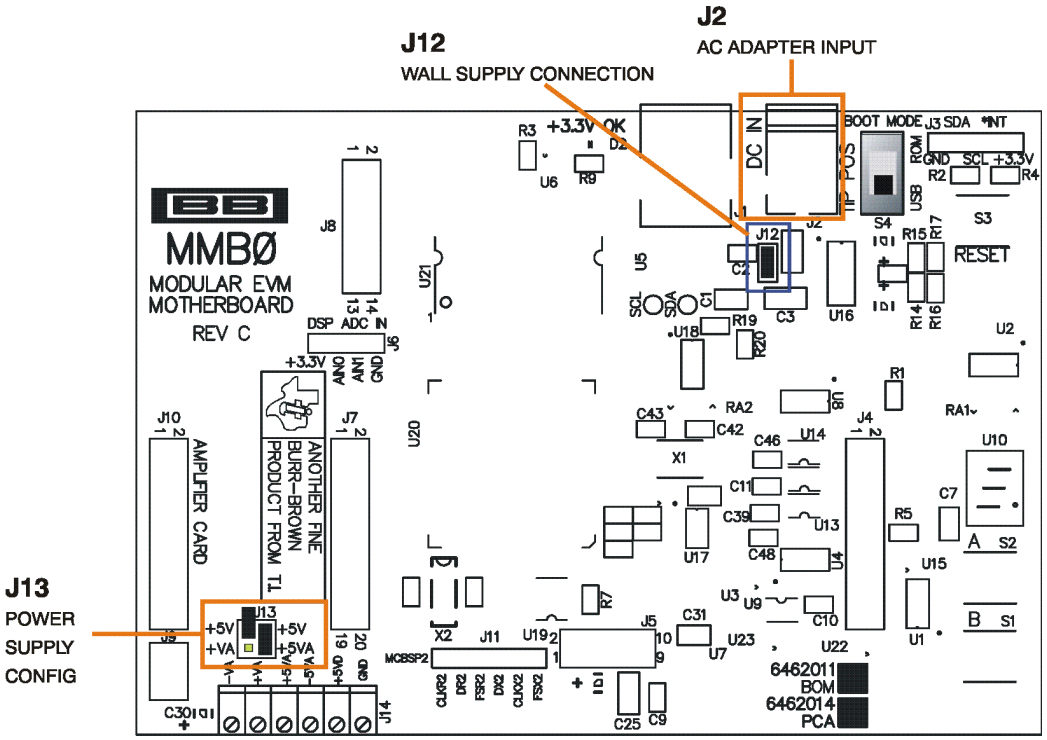

Figure 11. Connecting an AC Adapter

9.3.2 Connecting a Laboratory Power Supply

A laboratory power supply can be connected through terminal block J14 on the MMB0, as shown in Figure 12. Both unipolar and bipolar configurations are supported.

To use a unipolar lab power supply configuration:

- Disconnect J12 on the MMB0.
- Connect a +5V dc supply to the +5VD terminal on J14.
- Connect ground of the dc supply to the GND terminal on J14.

For bipolar mode, also connect a –10V dc supply to the –VA, and +10V on the +VA terminals on J14.

It is not necessary to connect a +5V dc supply voltage to the +5VA terminal on J14 if the +5V/+5VA position on J13 is shorted.

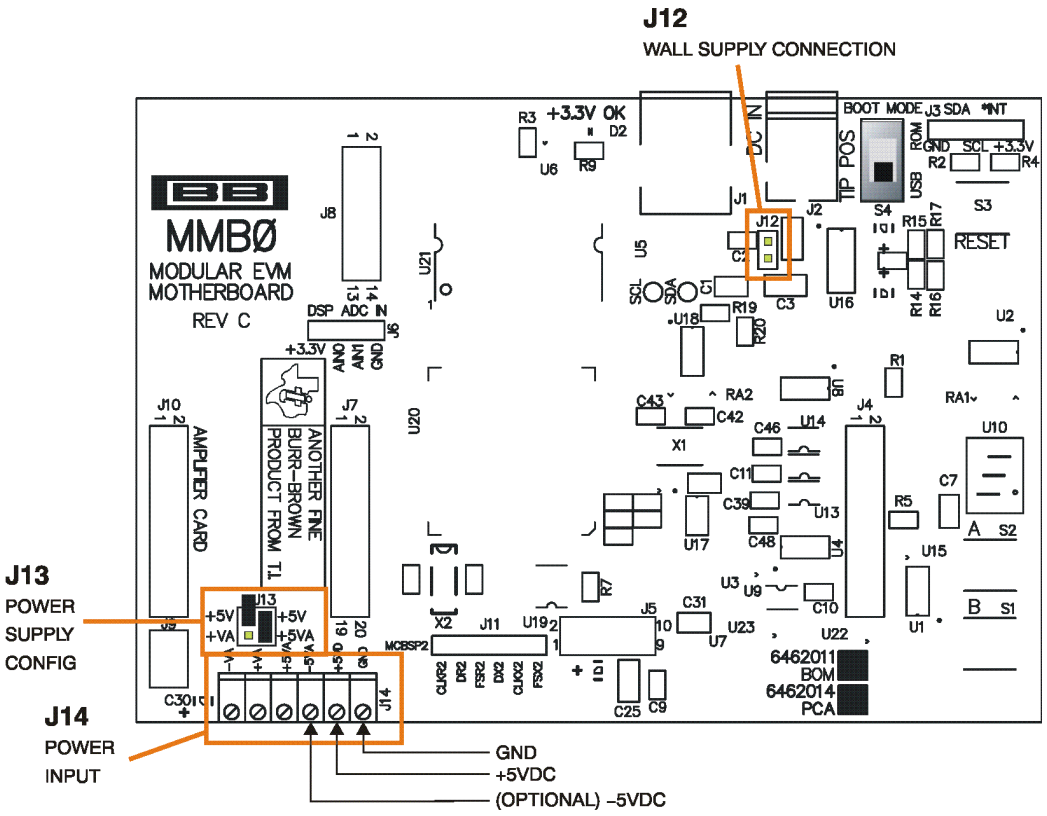

Figure 12. Laboratory Power-Supply Connection

9.4 Running the Software and Completing Driver Installation

Note: The software is continually under development. These instructions and screen images are current at the time of this writing, but may not exactly match future releases.

The program for evaluating the ADS1274EVM-PDK is called ADCPro. This program uses plug-ins to communicate with the EVM. The ADS1274EVM-PDK plug-in is included in the ADS1274EVM-PDK package.

The program currently runs only on Microsoft Windows platforms of Windows XP; Windows Vista is **NOT** supported.

If this is the first time installing ADCPro and plug-ins, follow these procedures to run ADCPro and complete the necessary driver installation. Make sure the ADCPro software and device plug-in software are installed from the CD-ROM as described in Section 9.1.

9.4.1 NI-VISA USB Device Driver Installation

1. After the ADCPro software is installed, apply power to the PDK and connect the board to an available PC USB port.
2. The computer should recognize new hardware and begin installing the drivers for the hardware. Figure 13 through Figure 16 are provided for reference to show the installation steps.
   - For the first screen, Figure 13, it is not necessary to search for the software; it has already been installed to your PC.
   - For the remaining steps, accept the default settings.

Figure 13. NI-VISA Driver Installation

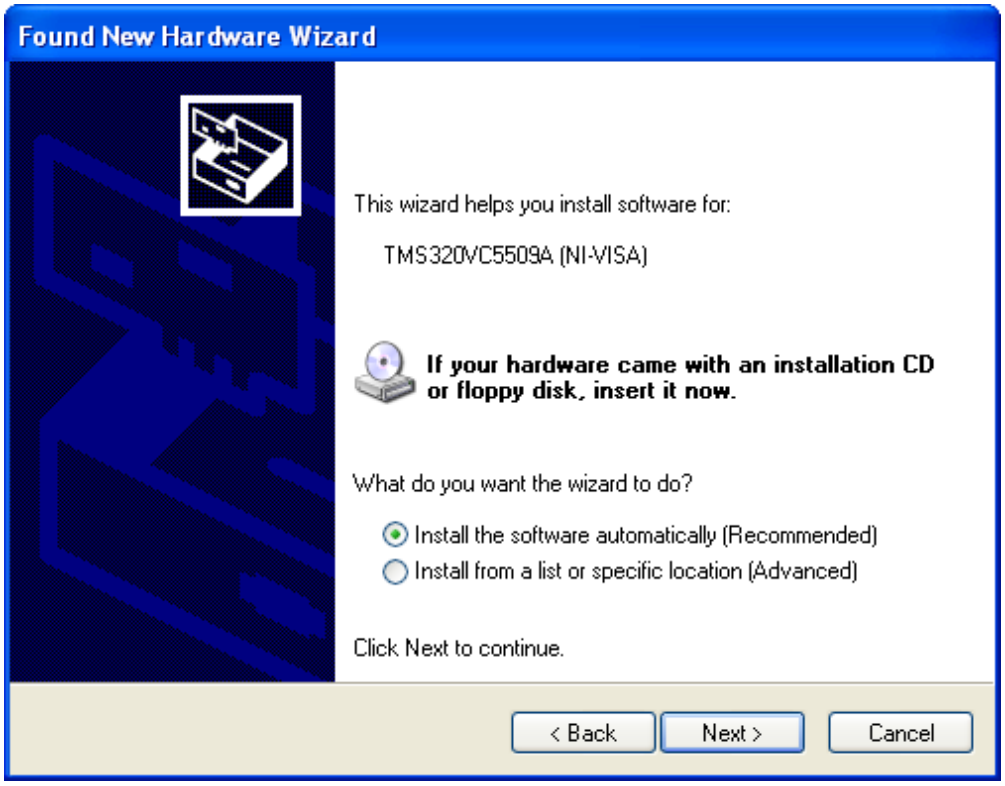

Figure 14. NI-VISA Driver Installation Question

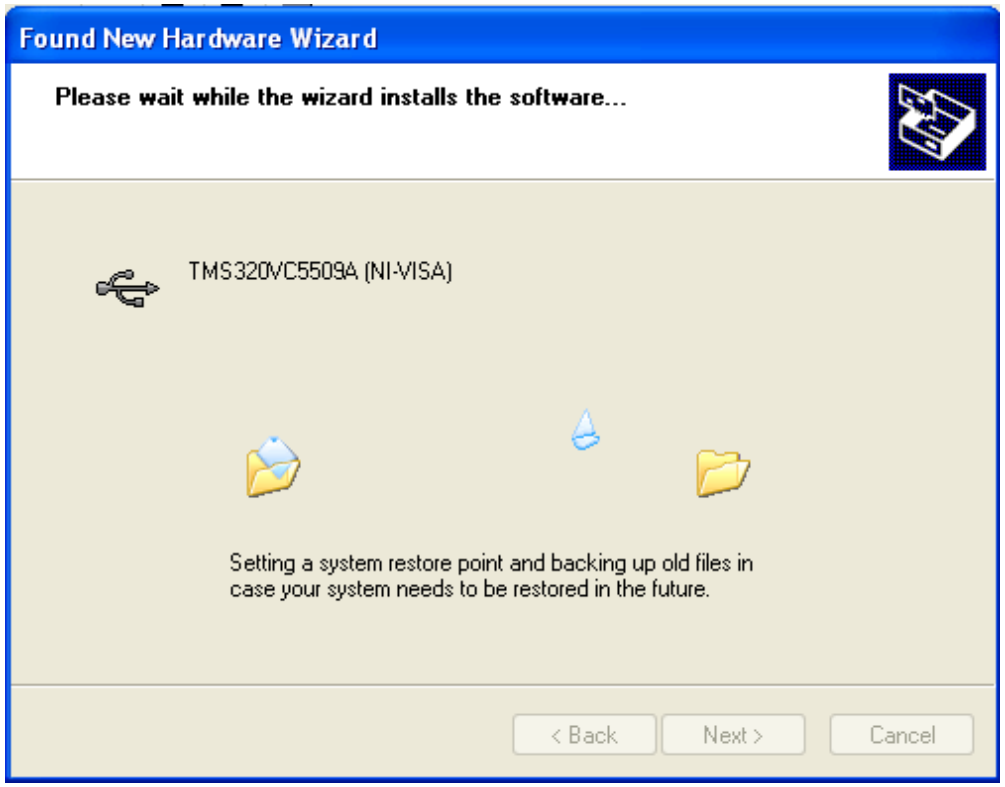

Figure 15. NI-VISA Driver Installing

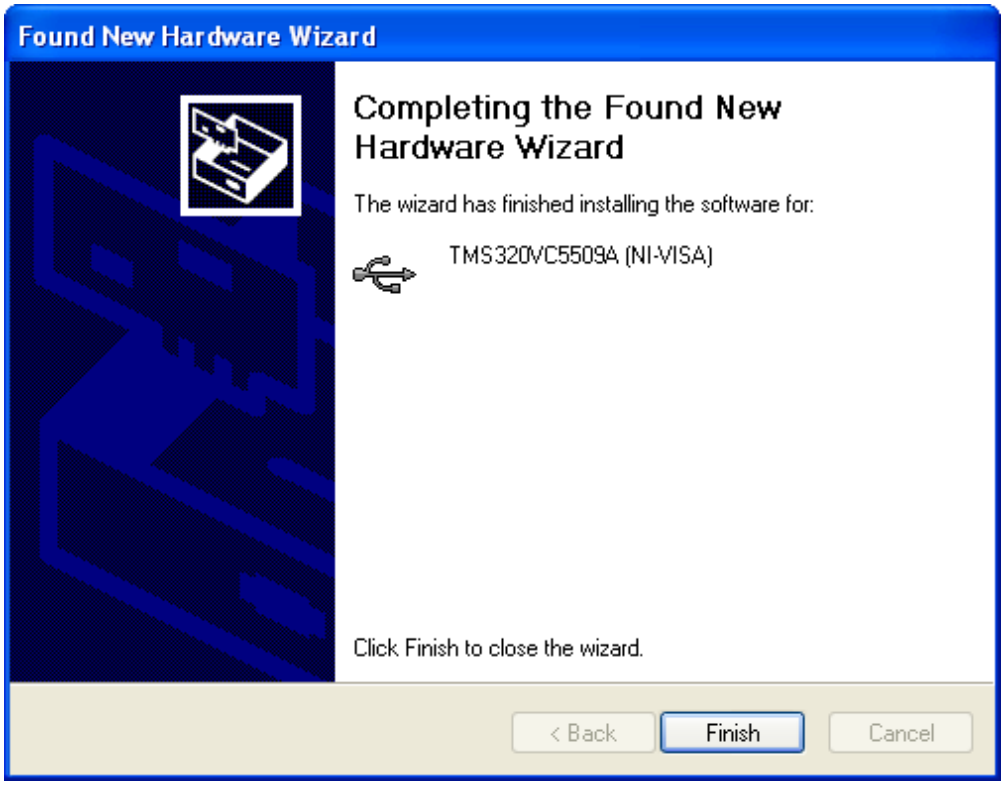

Figure 16. NI-VISA Driver Complete Installation

This should complete the installation of the NI-VISA drivers. You can verify proper installation by opening the Device Manager and locating as shown in Figure 17.

Figure 17. NI-VISA Driver Verification Using Device Manager

9.4.2 USBStyx Driver Installation

Step 1. Start the software by selecting *ADCPro* from the Windows Start menu. The screen in Figure 18 appears.

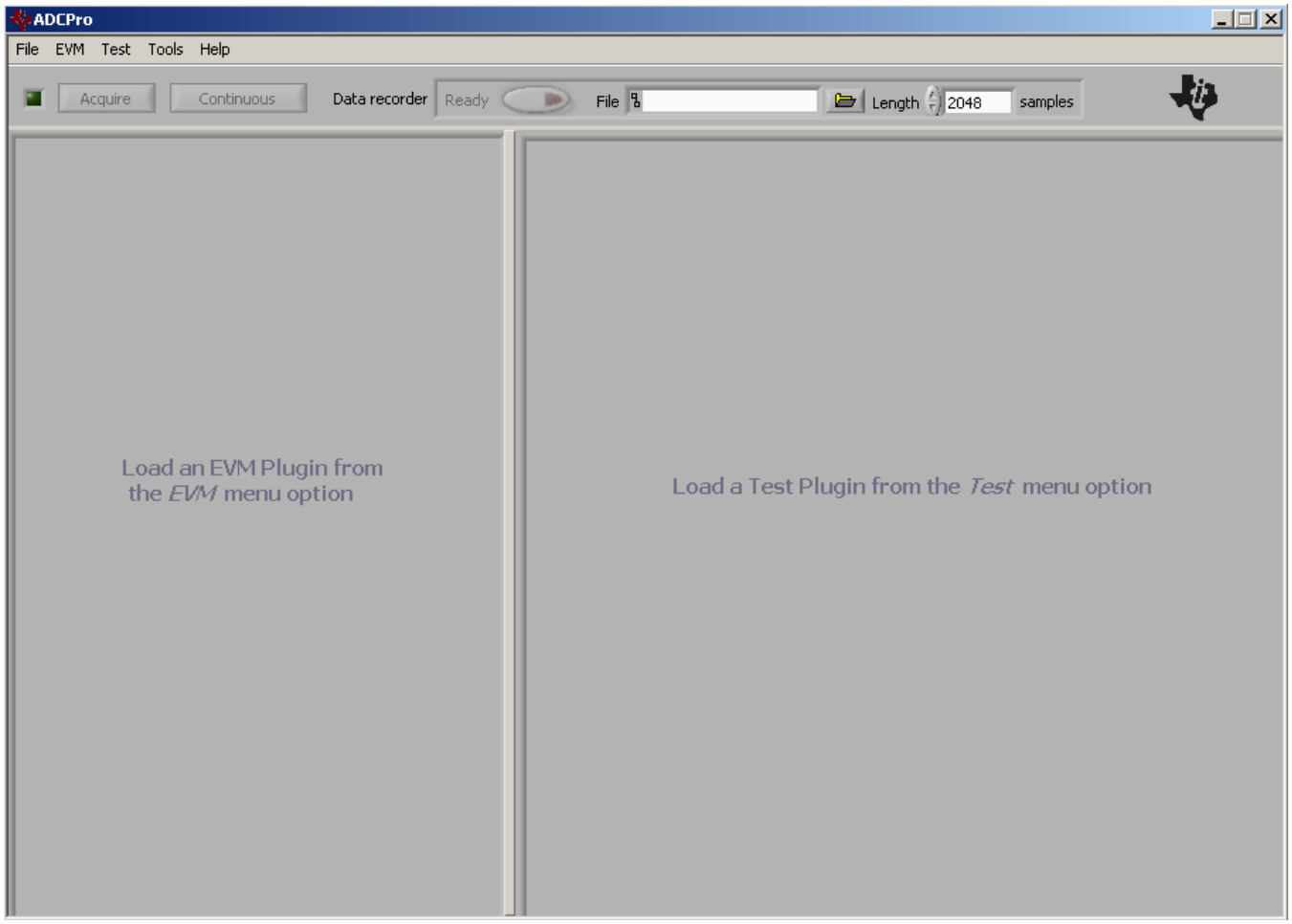

Figure 18. ADCPro Software Start-up Display Window

Step 2. Select *ADS1274EVM* from the EVM drop-down menu. The ADS1274EVM-PDK plug-in appears in the left pane, as shown in Figure 19.

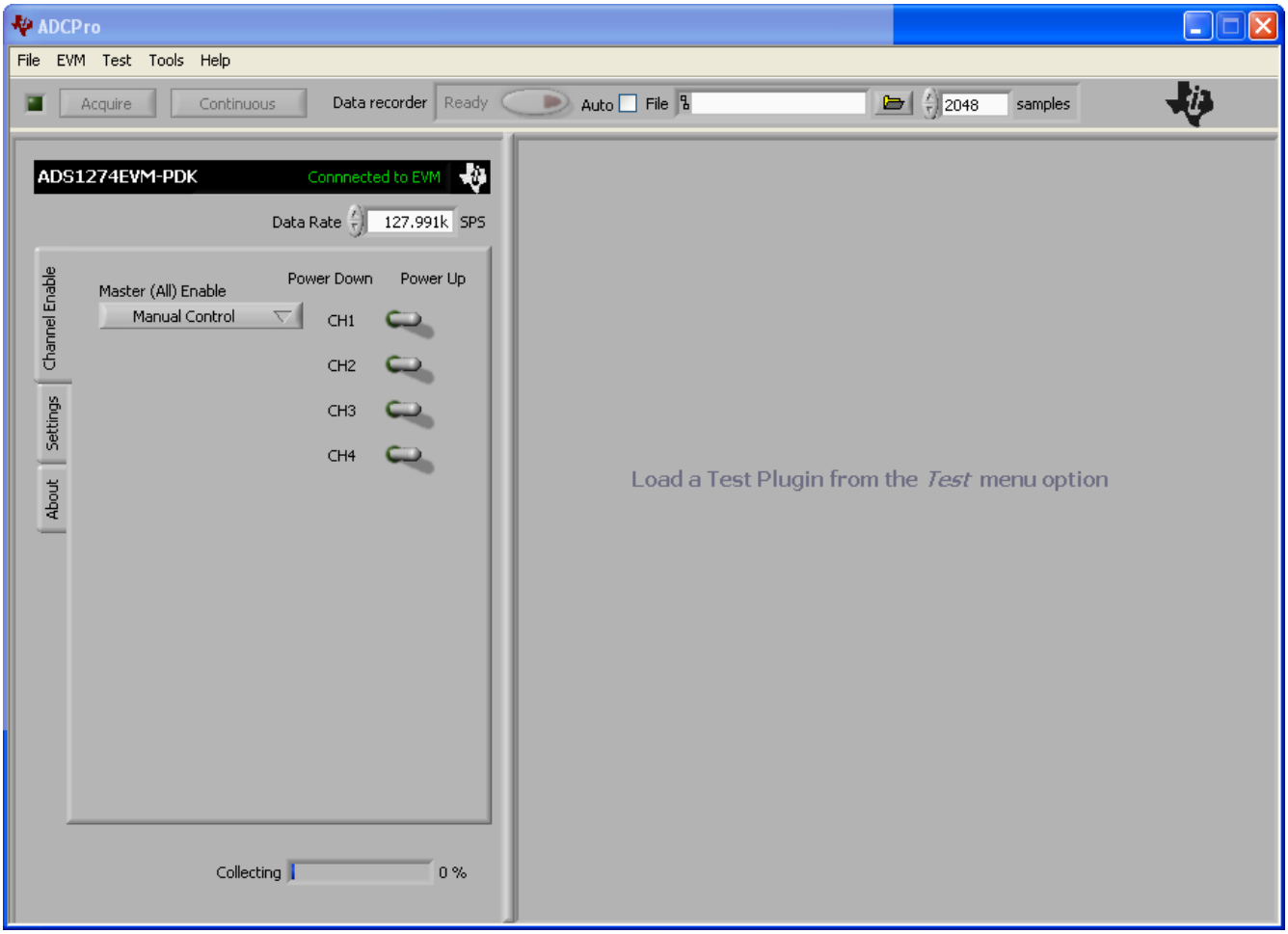

Figure 19. ADS1274EVM-PDK Plug-In Display Window

Step 3. The ADS1274EVM-PDK plug-in window has a status area at the top of the screen. When the plug-in is first loaded, the plug-in searches for the board. You will see a series of messages in the status area indicating this action.

Step 4. If you have not yet loaded the operating system drivers, Windows will display the Windows Install New Driver Wizard sequence (illustrated in Figure 20 through Figure 24). Accept the default settings.

Note: During the driver installation, a message may appear indicating the firmware load has TIMED OUT. Click OK and continue driver installation. The plug-in will attempt to download the firmware again once the driver installation completes.

Figure 20. Install New Driver Wizard Screen 1

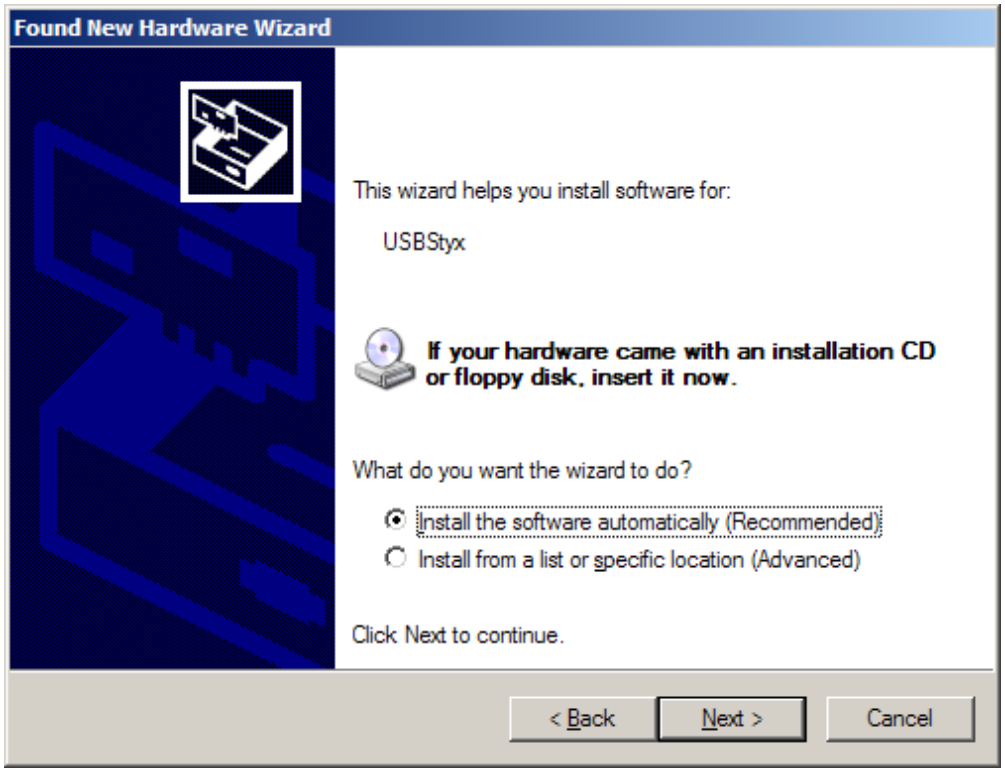

Figure 21. Install New Driver Wizard Screen 2

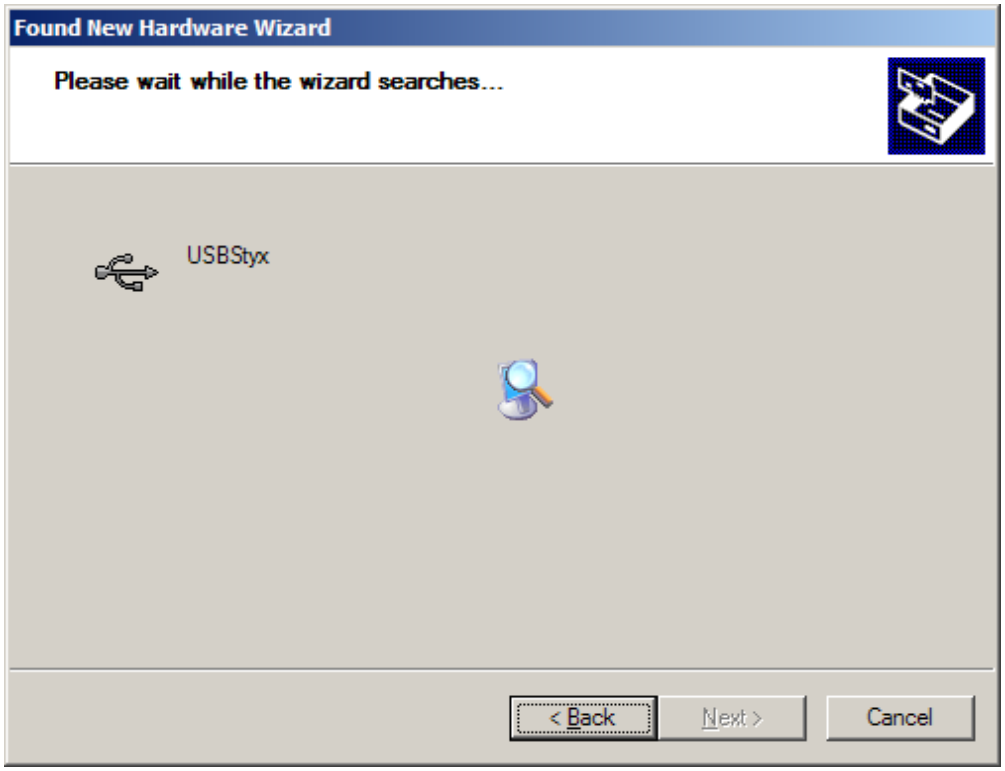

Figure 22. Install New Driver Wizard Screen 3

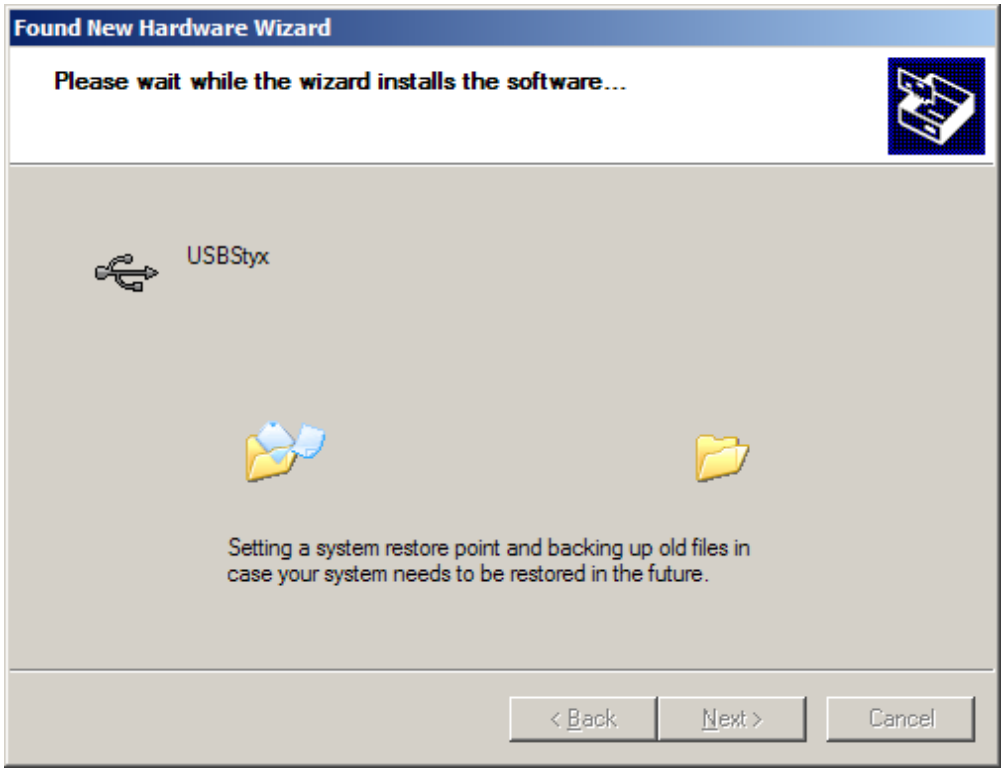

Figure 23. Install New Driver Wizard Screen 4

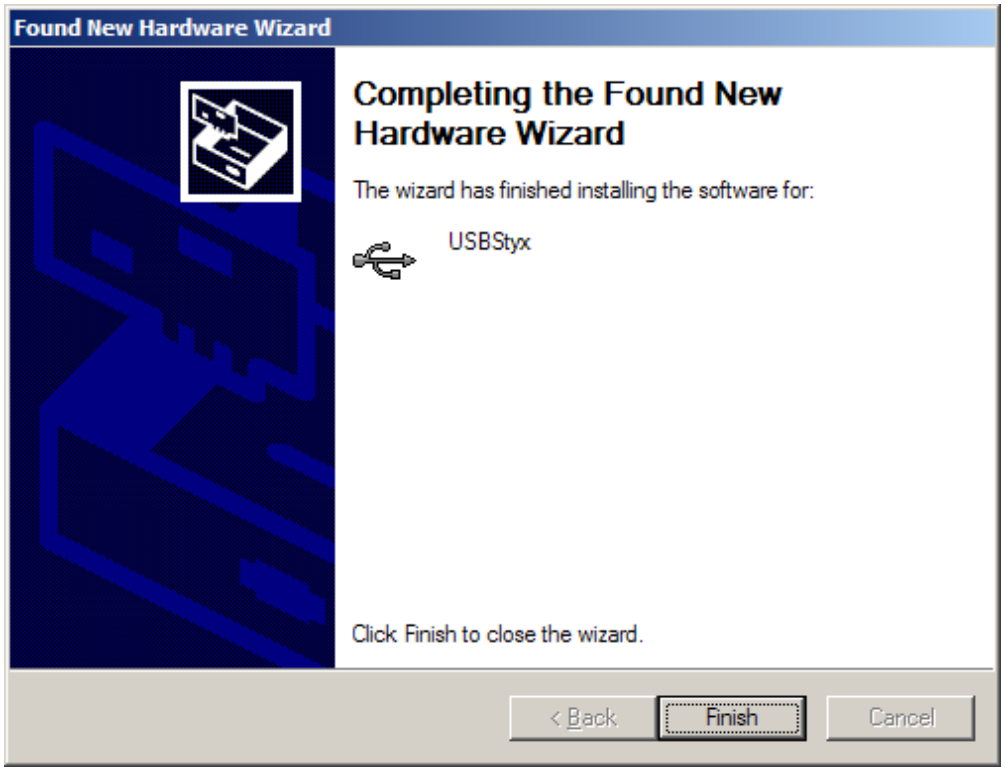

Figure 24. Install New Driver Wizard Screen 5

Step 5. Once Windows finishes installing the software driver, the plug-in downloads the firmware to the MMB0. The status area will display *Connected to EVM* when the device is connected and ready to use. If the firmware does not load properly, you can try resetting the MMB0 by pressing reset and then reloading the plug-in.

Step 6. You can verify the proper installation of the USBStyx driver using the Device Manager. Note that the first driver item, NI-VISA USB Devices, will disappear and a new item, LibUSB-Win32 Devices will appear, as Figure 25 shows.

Figure 25. USBSytx Driver Verification Using Device Manager

The driver installation wizard sequence should not appear again, unless you connect the board to a different USB port.

10 Evaluating Performance with the ADCPro Software

The evaluation software is based on ADCPro, a program that operates using a variety of plug-ins. (The ADS1274EVM plug-in is installed as described in the installation section, .)

To use ADCPro, load an EVM plug-in and a test plug-in. To load an EVM plug-in, select it from the *EVM* menu. To load a test plug-in, select it from the *Test* menu. To unload a plug-in, select the *Unload* option from the corresponding menu.

Only one of each kind of plug-in can be loaded at a time. If you select a different plug-in, the previous plug-in is unloaded.

10.1 Using the ADS1274EVM-PDK Plug-in

The ADS1274EVM-PDK plug-in for ADCPro provides complete control over all settings of the ADS1274. It consists of a tabbed interface (see Figure 19), with different functions available on different tabs. These controls are described in this section.

You can adjust the ADS1274EVM settings when it is not acquiring data. During acquisition, all controls are disabled and settings may not be changed.

When you change a setting on the ADS1274EVM plug-in, the setting immediately updates on the board.

Settings on the ADS1274EVM correspond to settings described in the ADS1274 product data sheet; see the ADS1274 data sheet for details.

Because the effective data rate of the ADS1274 depends upon settings of the Clock Freq and Operating Mode, the **Data Rate** indicator in the upper right corner of the plug-in interface is always visible and updates whenever a setting changes that affects the data rate.

10.1.1 Channel Enable Tab

The ADS1274 can acquire from one to four channels simultaneously. The Channel Enable tab (as shown in Figure 26) provides the control to turn each channel on or off.

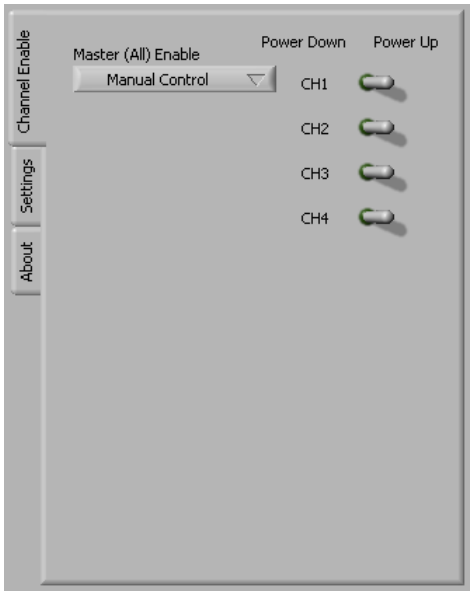

Figure 26. Channel Enable

In addition, the Manual Control button (shown in Figure 27) can be used to enable or disable all the channels.

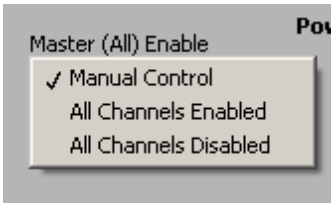

Figure 27. Manual Channel Control

10.1.2 Settings Tab

The ADS1274 requires a clock to operate. The maximum frequency is selected for the different operating modes, as shown in Table 7.

Table 7. Operating Modes: Clock Frequency

Operating Mode	CLKDIV	Frequency (MHz)
High-Speed		32.768
High-Resolution		27
Low-Power	1	27
Low-Power	0	13.5
Low-Speed	1	27
Low-Speed	0	5.4

If the PLL is selected as the clock source, a frequency can be entered in the **Clock Frequency** box; the software will find the closest frequency that is possible for the PLL to synthesize (and which is within the maximum allowable frequency for the mode selected) and will set the clock to that frequency, as well as display the actual frequency used in the **Clock Frequency** box once focus has moved from that control.

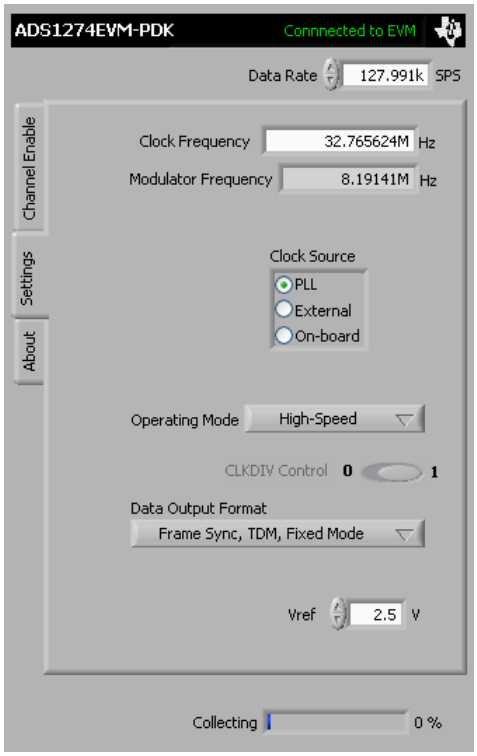

Figure 28. Clock Settings and Mode

The Operating Mode control (illustrated in Figure 29) can select from High-Speed, High-Resolution, Low-Power, or Low-Speed.

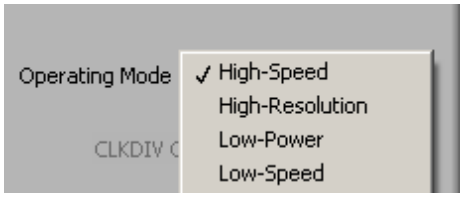

Figure 29. Operating Mode

The CLKDIV control can be selected to be **0** or **1**. The Data Output Formats are limited to the Frame Sync, TDM Format, but both Dynamic and Fixed Mode can be selected. Figure 30 shows the output data format options.

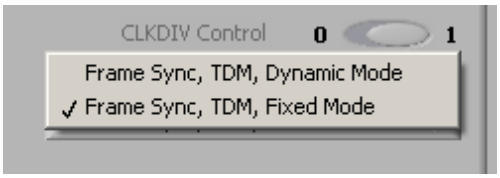

Figure 30. Output Data Format

10.1.3 Collecting Data

Once you have configured the ADS1274 for your test scenario, press the ADCPro **Acquire** button to start the collection of the number of datapoints specified in the Test plug-in *Block Size* control. The ADS1274EVM-PDK plug-in disables all the front panel controls while acquiring, and displays a progress bar as shown in Figure 31.

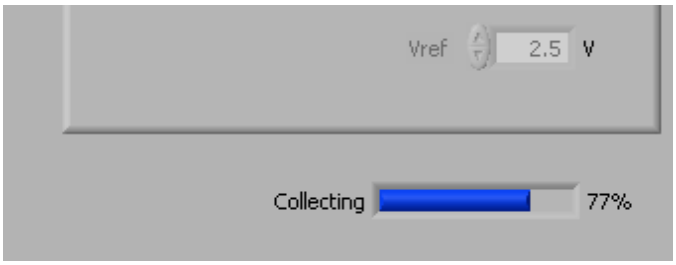

Figure 31. Progress Bar While Collecting Data

For more information on testing analog-to-digital converters in general and using ADCPro and Test plug-ins, refer to the ADCPro User Guide.

10.2 Troubleshooting

If ADCPro stops responding while the ADS1274EVM-PDK is connected, try unplugging the power supply from the PDK. Unload and reload the plug-in before reapplying power to the PDK.

11 Schematics and Layout

Schematics for the ADS1174EVM and ADS1274EVM are appended to this user's guide. The bill of materials is provided in Table 8.

11.1 Bill of Materials

Note: All components should be compliant with the European Union Restriction on Use of Hazardous Substances (RoHS) Directive. Some part numbers may be either leaded or RoHS. Verify that purchased components are RoHS-compliant. (For more information about TI's position on RoHS compliance, see the Texas Instruments web site.)

Table 8. ADS1174EVM/ADS1274EVM Bill of Materials

Item No.	Qty	Value	Ref Des	Description	Vendor	Part Number
1	6	47	R39-R45. R44, R45	Resistor, Thick Film Chip 47 Ω, 5%, 1/10W, Size = 0603	Panasonic	ERJ-3GEYJ470V
2	16	49.9	R36, R46, R56-R69	Resistor, Thick Film Chip 49.9 Ω, 1%, 1/16W, Size = 0603	Panasonic	ERJ-3EKF49R9V
3	1	100	R37	Resistor, Thick Film Chip 100 Ω, 5%, 1/10W, Size = 0603	Panasonic	ERJ-3GEYJ101V
4	18	1K	R2-R19	Resistor, Thick Film Chip 1 kΩ, 1%, 1/16W, Size = 0603	Panasonic	ERJ-3EKF1001V
5	1	2K	R38	Resistor, Thick Film Chip 2 kΩ, 5%, 1/10W, Size = 0603	Panasonic	ERJ-3GEYJ202V
6	1	4.22K	R71	Resistor, Thick Film Chip 4.22 kΩ, 1%, 1/16W, Size = 0603	Panasonic	ERJ-3EKF4221V
7	3	10K	R50, R51, R70	Resistor, Thick Film Chip 10 kΩ, 5%, 1/10W, Size = 0603	Panasonic	ERJ-3GEYJ103V
9	1	47K	R47	Resistor, Thick Film Chip 47 kΩ, 5%, 1/10W, Size = 0603	Panasonic	ERJ-3GEYJ473V
10	2	100K	R1,R72	Resistor, Thick Film Chip 100 kΩ, 5%, 1/10W, Size = 0603	Panasonic	ERJ-3GEYJ104V
11	2	150K	R53, R54	Resistor, Thick Film Chip 150 kΩ, 5%, 1/10W, Size = 0603	Panasonic	ERJ-3GEYJ154V
12	2	470K	R48, R49	Resistor, Thick Film Chip 470 kΩ, 5%, 1/10W, Size = 0603	Panasonic	ERJ-3GEYJ474V
13	1	1.1M	R52	Resistor, Thick Film Chip 1.1 MΩ, 5%, 1/8W, Size = 0805	Rohm	MCR10EZHF1104
14	1	1.24M	R55	Resistor, Thick Film Chip 1.24 MΩ, 5%, 1/8W, Size = 0805	Rohm	MCR10EZHF1244
15	2	100K	RA1, RA2	Resistor, Chip Array 10 Terminal Bus 100 kΩ, 5%, 1/16W, SMD	CTS	745C101104JPTR
16	2	6.2pF	C28, C29	Capacitor, C0G Ceramic 6.2 pF ±0.5pF, 50WV, Size = 0603	Murata	GRM1885C1H6R2DZ01D
17	8	1.5nF	C36-C43	Capacitor, C0G Ceramic 1500 pF ±5%, 50WV, Size = 0603	TDK	C1608C0G1H152JT
18	4	2.2nF	C17-C20	Capacitor, C0G Ceramic 2200 pF±5%, 50WV, Size = 0603	TDK	C1608C0G1H222JT
19	1	4.7nF	C33	Capacitor, X7R Ceramic 4700 pF ±10%, 50WV, Size = 0603	TDK	C1608X7R1H472KT
20	3	10nF	C32, C34, C76	Capacitor, X7R Ceramic 0.01 µF ±5%, 50WV, Size = 0603	TDK	C1608X7R1H103KT
21	28	0.1 µF	C4-C12, C26, C52-C63, C77-C80, C83, C84	Capacitor, X7R Ceramic 0.1 µF ±10%, 50WV, Size = 0603	TDK	C1608X7R1H104KT

Table 8. ADS1174EVM/ADS1274EVM Bill of Materials (continued)

Item No.	Qty	Value	Ref Des	Description	Vendor	Part Number
22	1	0.15 µF	C3	Capacitor, X7R Ceramic 0.15 µF ±10%, 25WV, Size = 0603	TDK	C1608X7R1E154KT
23	1	0.22 µF	C35	Capacitor, X7R Ceramic 0.22 µF ±10%, 16WV, Size = 0603	TDK	C1608X7R1C224KT
24	1	0.47 µF	C1	Capacitor, X5R Ceramic 0.47 µF ±10%, 10WV, Size = 0603	TDK	C1608X5R1A474KT
25	2	1 µF	C27, C81	Capacitor, X7R Ceramic 1 µF ±10%, 16WV, Size = 0603	TDK	C1608X7R1C105KT
26	1	4.7 µF	C25	Capacitor, X7R Ceramic 4.7 µF ±10%, 6.3WV, Size = 0805	Murata	GRM21BR61C475KA88L
27	5	10 µF	C21-C24, C82	Capacitor, X5R Ceramic 10 µF ±20%, 16WV, Size = 1206	TDK	C3216X5R1C106MT
28	2	22 µF	C30, C31	Capacitor, X5R Ceramic 22 µF ±20%, 16WV, Size = 1210	TDK	C3225X5R1C226MT
29	1	100 µF	C2	Capacitor, X5R Ceramic 100 µF ±20%, 6.3WV, Size = 1210	TDK	C3225X5R0J107MT
30	1		U4	Precision Delta-Sigma ADC, 4 Differential Input	Texas Instruments	ADS1274IPAP (ADS1274EVM) or ADS1174IPAP (ADS1174EVM)
31	1		U2	Precision Voltage Reference, 2.5V	Texas Instruments	REF5025ID
32	1		U3	Operational Amplifier, Dual	Texas Instruments	OPA2350EA
33	1		U1	Precision Voltage Reference	Texas Instruments	REF3125AIDBZ
34	4		U8-U11	Fully-Differential Amplifier	Texas Instruments	OPA1632DGN
35	1		U19	Single, Inverter	Texas Instruments	SN74LVC1G04DBVR
36	1		U20	Single, D Flip-Flop	Texas Instruments	SN74LVC2G74DCTR
35	1		U6	Single, 2-Line to 1 Data Selector/Multiplexer	Texas Instruments	SN74LVC2G157DCT
36	1		U16	LDO Voltage Regulator, 1.8 V, 200 mA	Texas Instruments	TPS73018DBV
37	1		U5	Dual output 800-mA DC/DC Switch boost converter	Texas Instruments	TPS65131RGET
38	2		U17, U18	16-Bit I2C I/O Expander	Texas Instruments	PCA9535RGE
39	1		U21	EEPROM, 1.8V, 256K	Microchip	24AA256-I/ST
39	1	27 MHz	U7	3.3-V Oscillator	CTS	CB3LV-3I-27M0000
40	2		J5A, J9A	20-pin SMT Plug	Samtec	TSM-110-01-L-DV-P
41	2		J5B, J9B	20-pin SMT Socket	Samtec	SSW-110-22-F-D-VS-K
42	1		J3A	10-pin SMT Plug	Samtec	TSM-105-01-L-DV-P
43	1		J3B	10-pin SMT Socket	Samtec	SSW-105-22-F-D-VS-K
44	2		J2, J6	Header Strip, 4-pin ( )	Samtec	TSW-102-07-L-D
46	3		J4, J17, J18	Header Strip, 2-pin ( )	Samtec	TSW-102-07-L-S
47	4		J1, J15, J16, J19	Header Strip, 4-pin ( )	Samtec	TSW-103-07-L-S
48	1		J7	Terminal Block 3.5-mm 9-Position PCB	On Shore Technology	ED555/9DS

Table 8. ADS1174EVM/ADS1274EVM Bill of Materials (continued)

Item No.	Qty	Value	Ref Des	Description	Vendor	Part Number
49	1		N/A	ADS1274EVM or ADS1174EVM PWB	Texas Instruments	6492532 or 6496219
50	2		D1, D2	Schottky Diode, 20V, 1A	ON Semiconductor	MBRM120LT1G
51	5		J10-J14	Bus Wire (18-22 Gauge)		
52	2		L1, L2	Inductor, 4.7 µH, 1.8 A, 6x6mm, SMD	EPCOS	B82462G4472M
53	5		S1-S5	Switch, Mini Slide, DPDT	NKK	SS22SDP2
54	1		S10	DIP Switch, Half-Pitch, 8-Position	C&K	TDA08H0SB1
55	1		S11	DIP Switch, Half-Pitch, 6-Position	C&K	TDA06H0SB1
56	1		S12	4PDT Slide Switch, Top Actuator	Tyco/Alcoswitch	MMS42
56	1		TP8	PCB Test Point, Large Loop, Through-hole	Keystone Electronics	5011
57	7		N/A	Shorting Blocks	Samtec	SNT-100-BK-G-H

REVISION HISTORY	
ENGINEERING CHANGE NUMBER	APPROVED

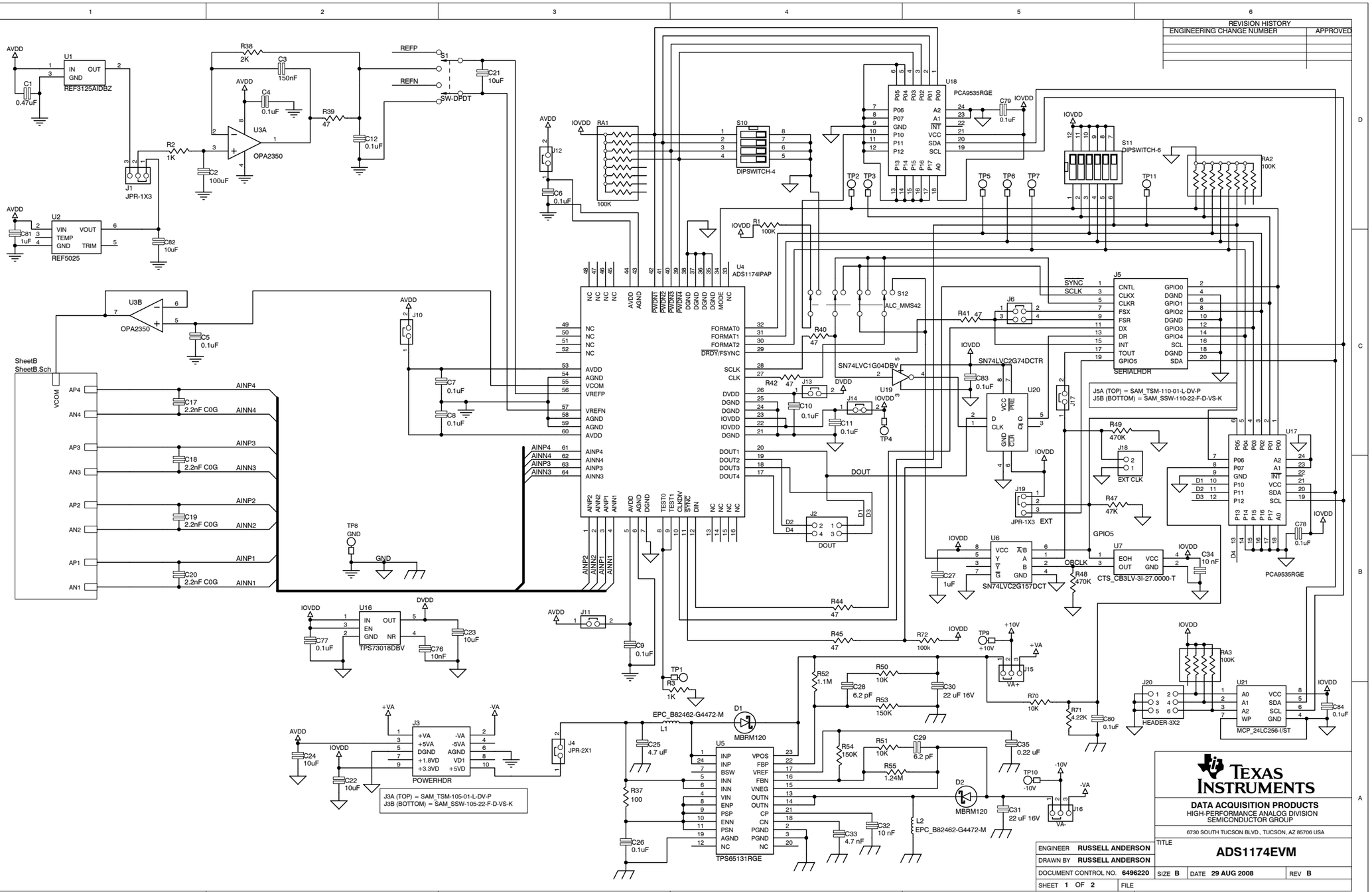

ENGINEER	**RUSSELL ANDERSON**
DRAWN BY	**RUSSELL ANDERSON**
DOCUMENT CONTROL NO.	**6496220**
SHEET	**1** OF **2**

TEXAS INSTRUMENTS

DATA ACQUISITION PRODUCTS
HIGH-PERFORMANCE ANALOG DIVISION
SEMICONDUCTOR GROUP

6730 SOUTH TUCSON BLVD., TUCSON, AZ 85706 USA

TITLE **ADS1174EVM**

SIZE **B** | DATE **29 AUG 2008** | REV **B**

FILE

REVISION HISTORY		
REV	ENGINEERING CHANGE NUMBER	APPROVED

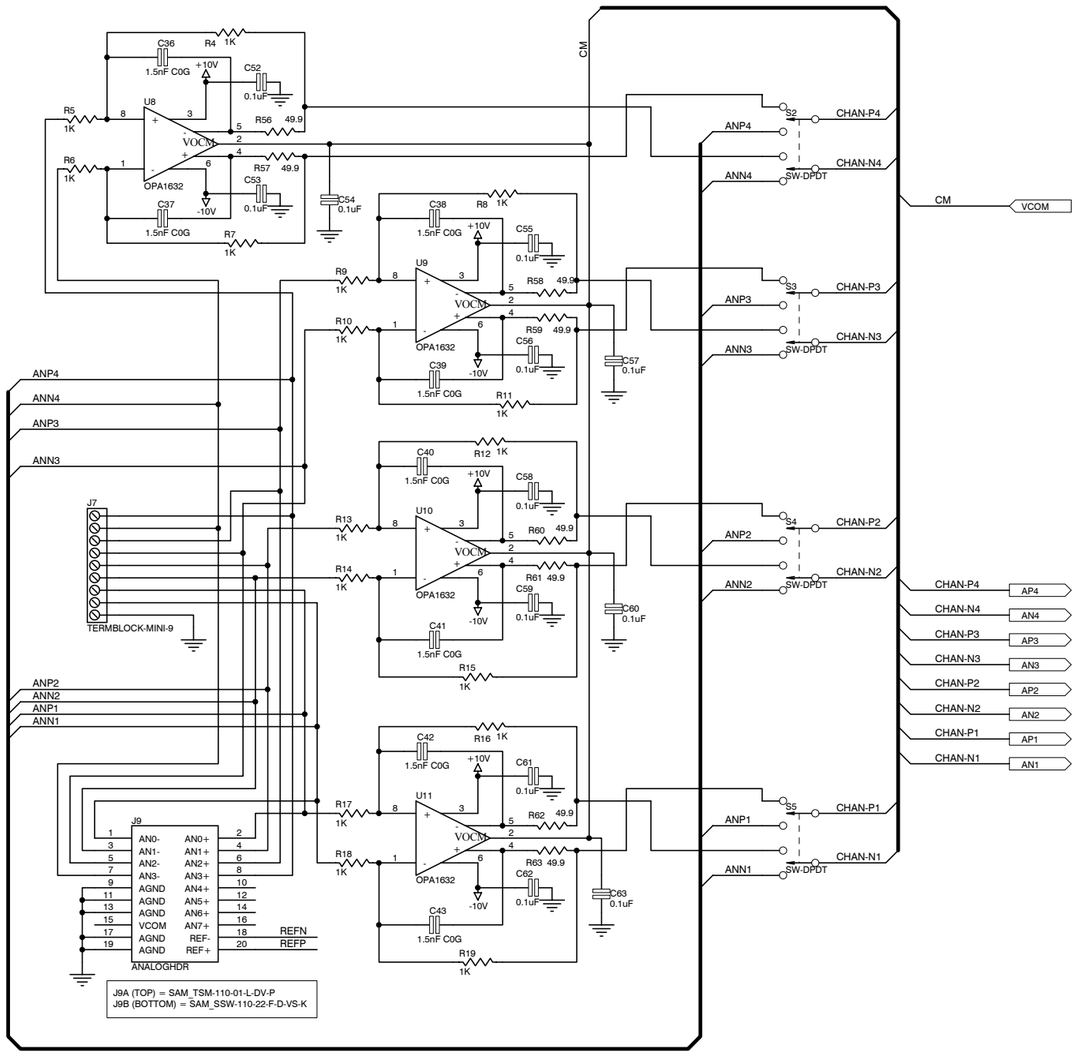

ENGINEER	**RUSSELL ANDERSON**
DRAWN BY	**RUSSELL ANDERSON**
DOCUMENT CONTROL NO.	**6496220**
SHEET	**2** OF **2**

TEXAS INSTRUMENTS

DATA ACQUISITION PRODUCTS
HIGH-PERFORMANCE ANALOG DIVISION
SEMICONDUCTOR GROUP

6730 SOUTH TUCSON BLVD., TUCSON, AZ 85706 USA

TITLE **ADS1174EVM**

SIZE **B** | DATE **29 AUG 2008** | REV **B**

FILE

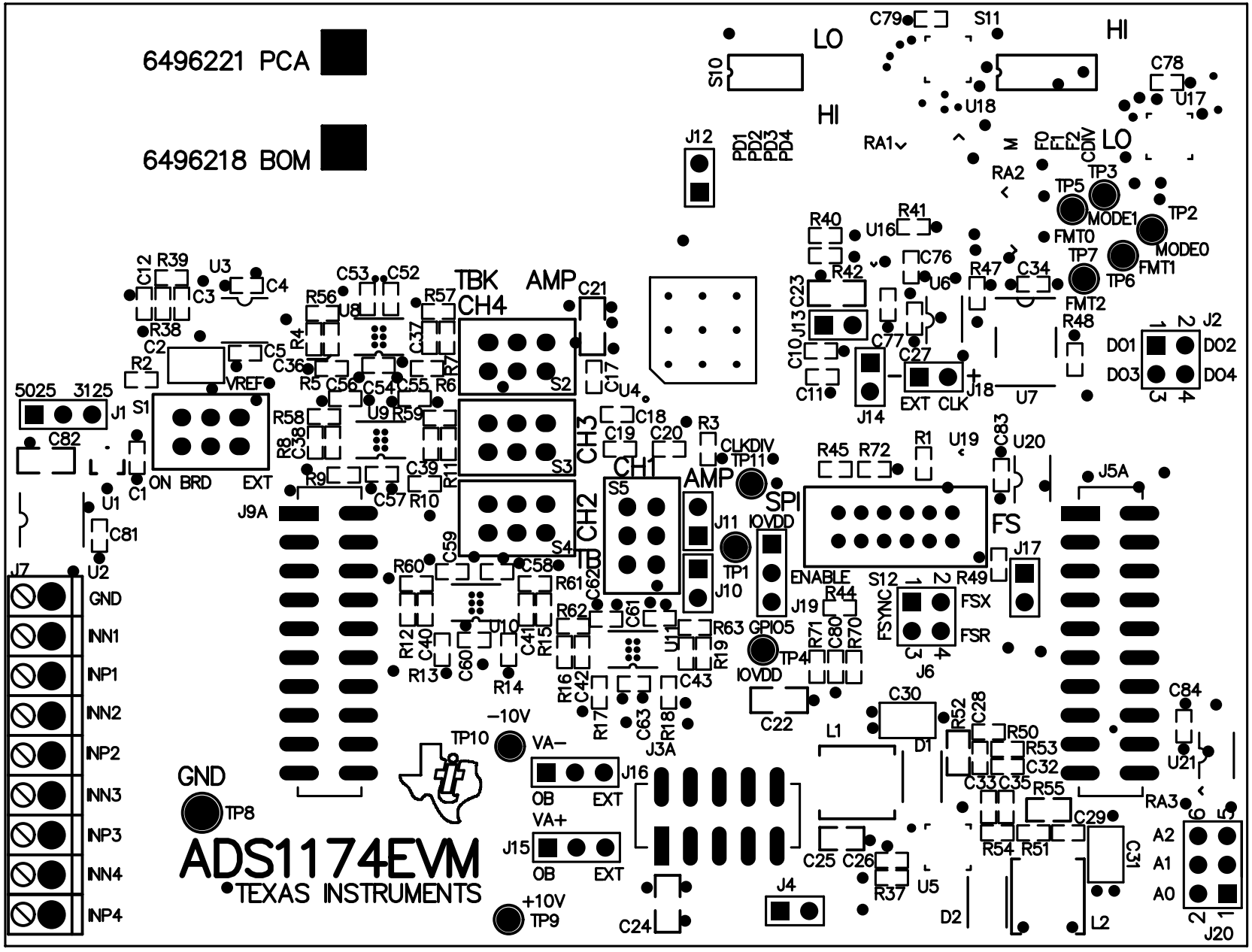
6496221 PCA
6496218 BOM
ADS1174EVM
TEXAS INSTRUMENTS
GND
INN1
INP1
INN2
INP2
INN3
INP3
INN4
INP4
TBK
AMP
CH4
CH3
CH2
CH1
TB
SPI
FS
ENABLE
FSYNC
FSX
FSR
CLKDIV
IOVDD
GPIO5
VREF
ON BRD
EXT
CLK
MODE1
MODE0
FMT0
FMT1
FMT2
DO1
DO2
DO3
DO4
A2
A1
A0
VA−
VA+
OB
−10V
+10V
LO
HI
J1
J2
J3A
J4
J5A
J6
J7
J9A
J10
J11
J12
J13
J14
J15
J16
J17
J18
J19
J20
S1
S2
S3
S4
S5
S10
S11
S12
TP1
TP2
TP3
TP4
TP5
TP6
TP7
TP8
TP9
TP10
TP11
U1
U2
U3
U4
U5
U6
U7
U8
U9
U10
U11
U16
U17
U18
U19
U20
U21
D1
D2
L1
L2
RA1
RA2
RA3
5025
3125

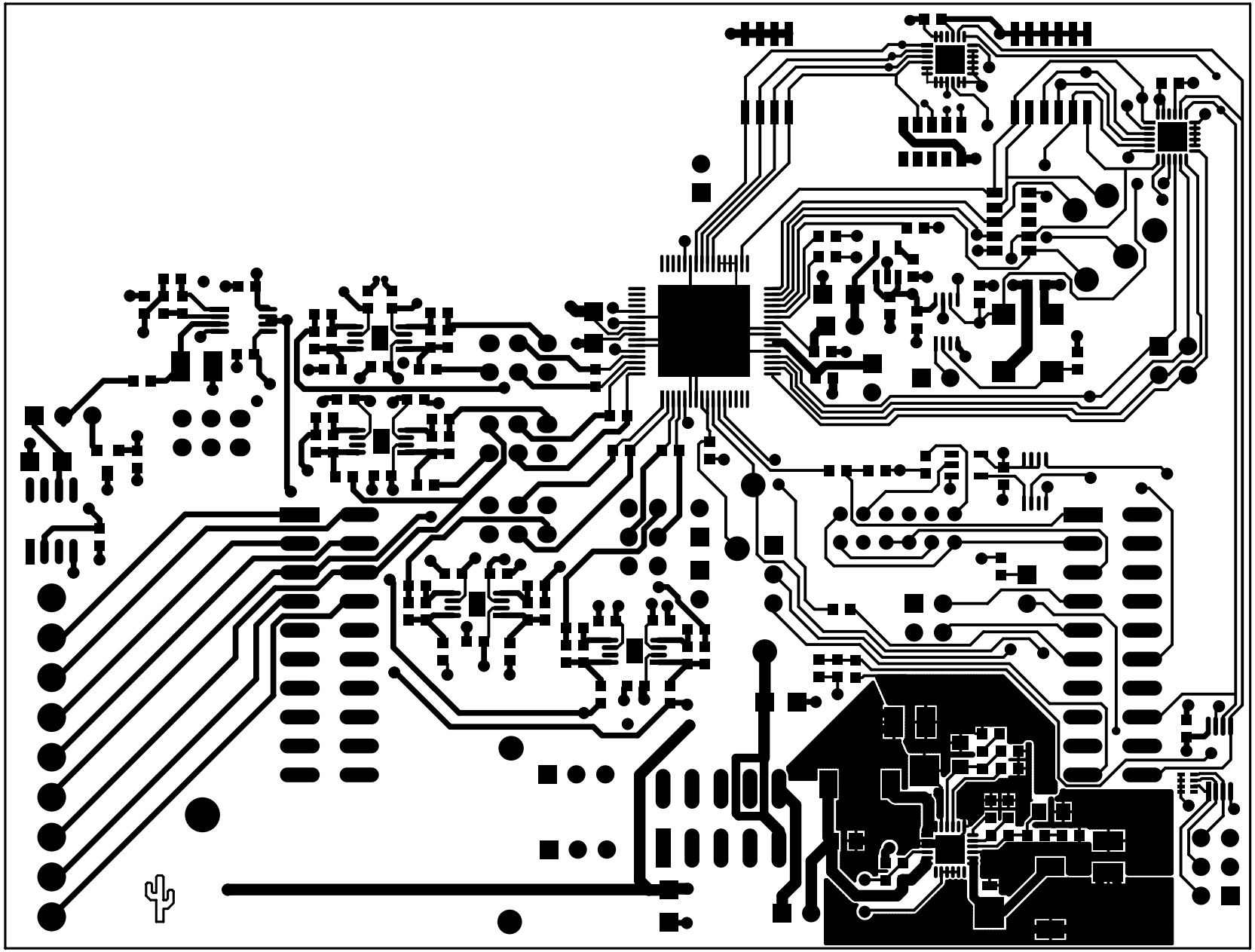

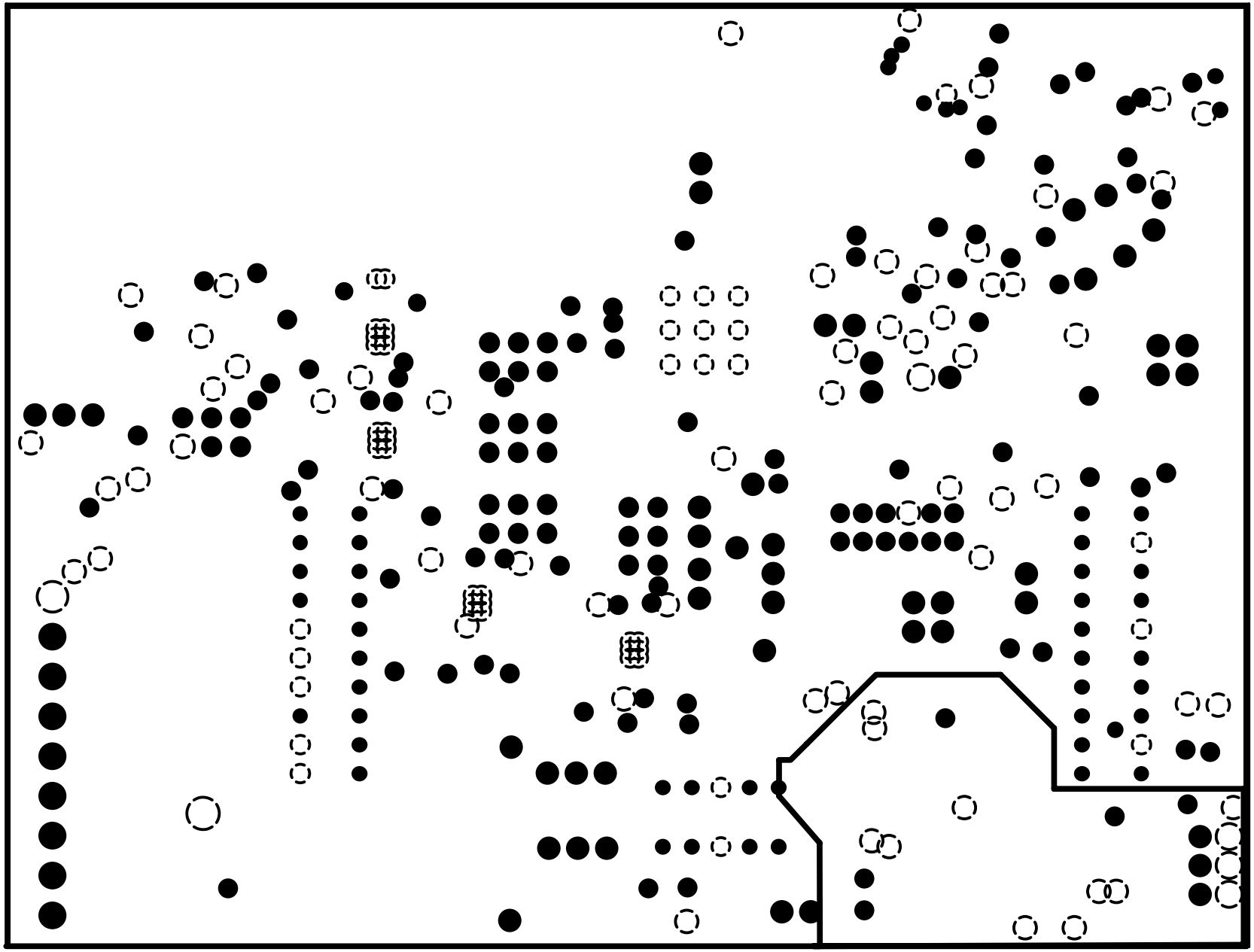

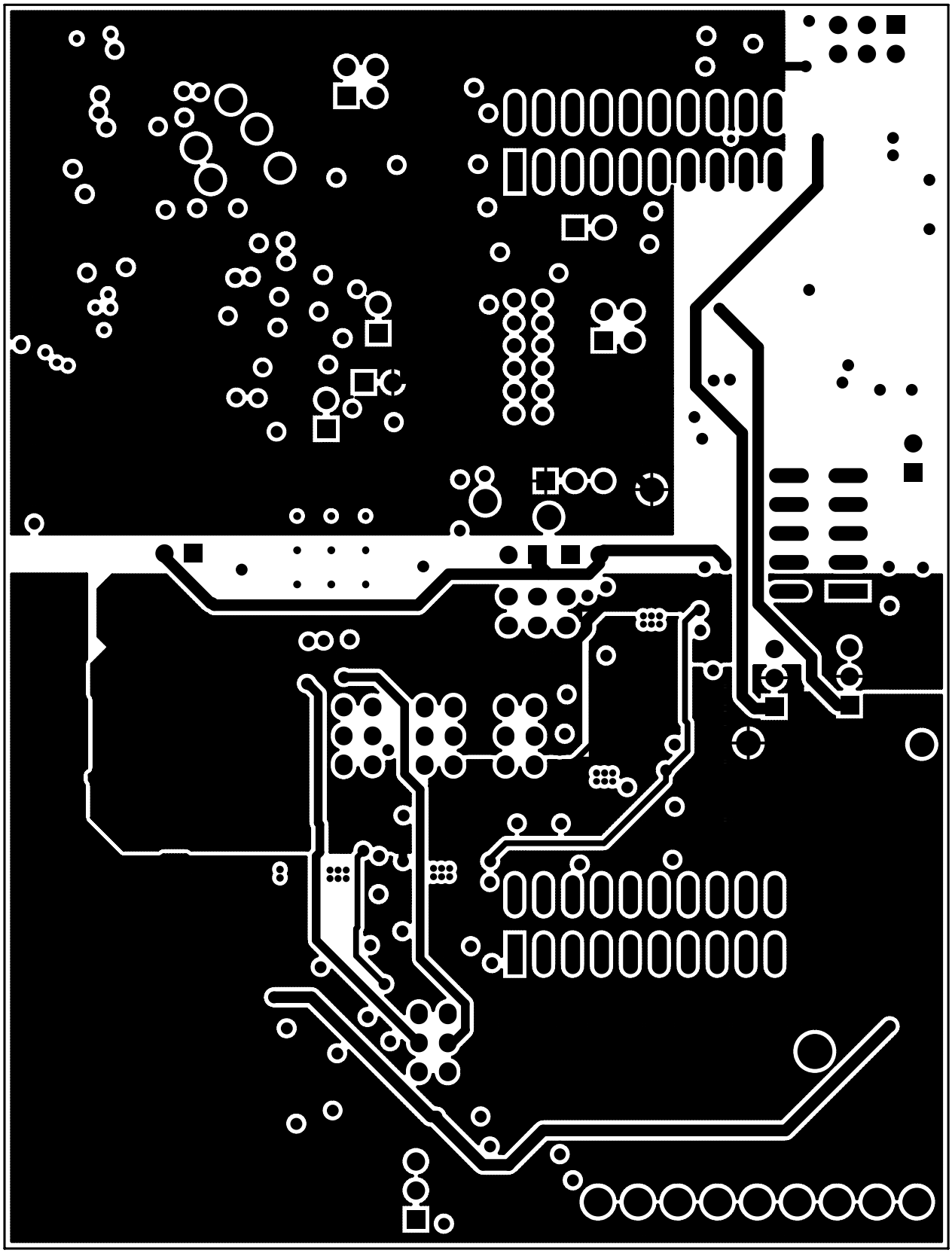

649619 PWB B

C9
C7
C8
C3
19B
15B
13B

REVISION HISTORY	
ENGINEERING CHANGE NUMBER	APPROVED

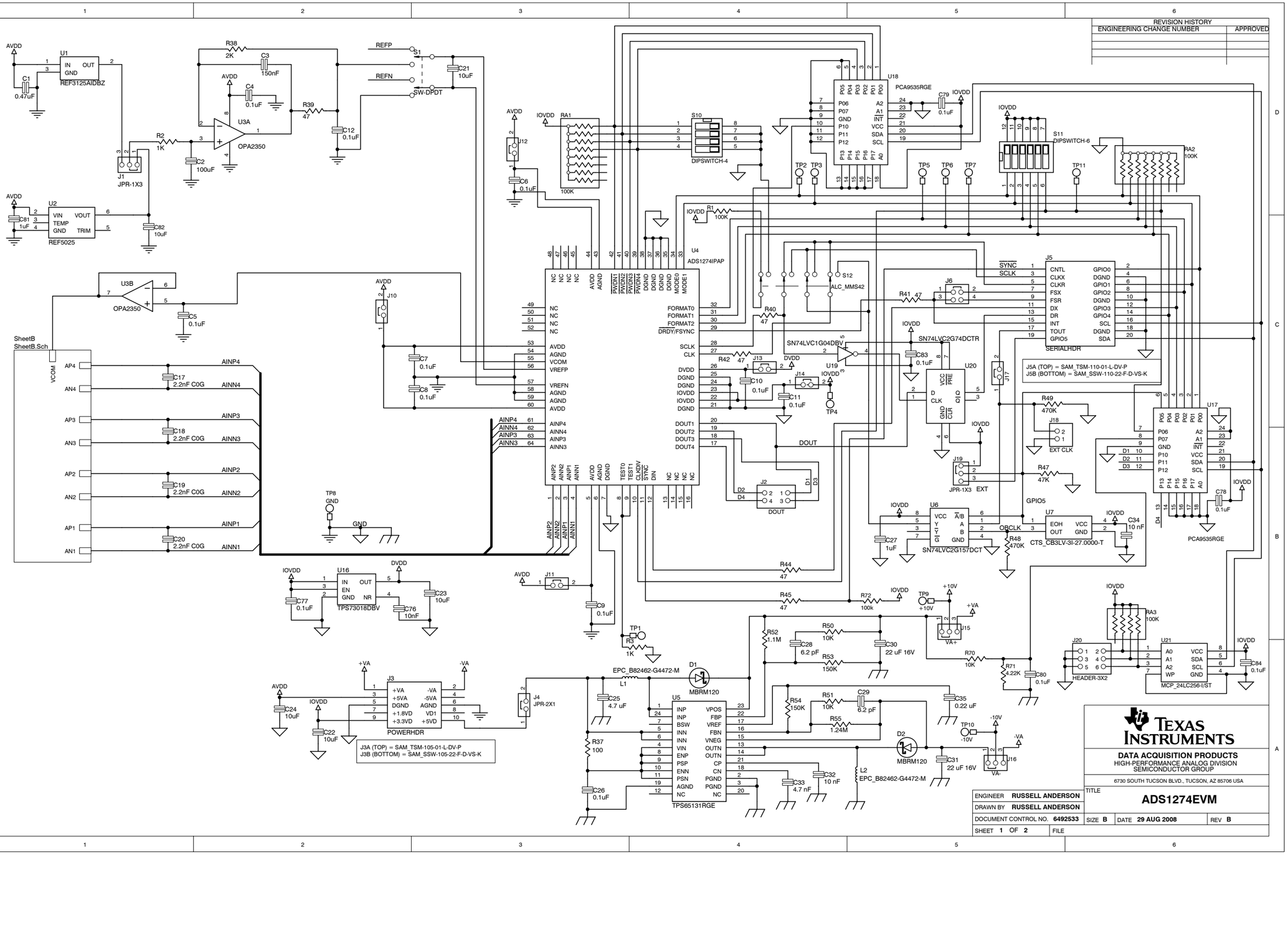
U1
REF3125AIDBZ
C1 0.47uF
R38 2K
C3 150nF
C4 0.1uF
U3A
OPA2350
R39 47
C12 0.1uF
REFP
REFN
S1
SW-DPDT
C21 10uF
R2 1K
C2 100uF
J1
JPR-1X3
U2
REF5025
C81 1uF
C82 10uF
U3B
OPA2350
C5 0.1uF
SheetB
SheetB.Sch
VCOM
AP4
AN4
AP3
AN3
AP2
AN2
AP1
AN1
C17 2.2nF C0G
C18 2.2nF C0G
C19 2.2nF C0G
C20 2.2nF C0G
AINP4
AINN4
AINP3
AINN3
AINP2
AINN2
AINP1
AINN1
TP8
GND
J10
C7 0.1uF
C8 0.1uF
U4
ADS1274IPAP
J12
C6 0.1uF
RA1
100K
S10
DIPSWITCH-4
U18
PCA9535RGE
C79 0.1uF
IOVDD
S11
DIPSWITCH-6
RA2 100K
TP2
TP3
TP5
TP6
TP7
TP11
R1 100K
S12
ALC_MMS42
R40 47
R41 47
R42 47
J13
J14
C10 0.1uF
C11 0.1uF
TP4
SN74LVC1G04DBV
U19
SN74LVC2G74DCTR
C83 0.1uF
U20
J5
SERIALHDR
SYNC
SCLK
CNTL
CLKX
CLKR
FSX
FSR
DX
DR
INT
TOUT
GPIO5
GPIO0
GPIO1
GPIO2
GPIO3
GPIO4
SCL
SDA
DGND
J5A (TOP) = SAM_TSM-110-01-L-DV-P
J5B (BOTTOM) = SAM_SSW-110-22-F-D-VS-K
J17
R49 470K
J18
EXT CLK
J19
JPR-1X3 EXT
R47 47K
U17
PCA9535RGE
C78 0.1uF
U6
SN74LVC2G157DCT
C27 1uF
U7
CTS_CB3LV-3I-27.0000-T
C34 10 nF
OBCLK
GPIO5
R48 470K
R44 47
R45 47
R72 100k
TP9
+10V
+VA
U15
VA+
TP1
R3 1K
C9 0.1uF
J11
U16
TPS73018DBV
C77 0.1uF
C76 10nF
C23 10uF
DVDD
R52 1.1M
R50 10K
C28 6.2 pF
C30 22 uF 16V
R53 150K
R70 10K
R71 4.22K
C80 0.1uF
RA3 100K
J20
HEADER-3X2
U21
MCP_24LC256-I/ST
C84 0.1uF
J3
POWERHDR
+VA
-VA
+5VA
-5VA
DGND
AGND
+1.8VD
VD1
+3.3VD
+5VD
J3A (TOP) = SAM_TSM-105-01-L-DV-P
J3B (BOTTOM) = SAM_SSW-105-22-F-D-VS-K
C24 10uF
C22 10uF
J4
JPR-2X1
EPC_B82462-G4472-M
L1
C25 4.7 uF
D1
MBRM120
U5
TPS65131RGE
R54 150K
R51 10K
C29 6.2 pF
R55 1.24M
C35 0.22 uF
D2
MBRM120
C31 22 uF 16V
L2
EPC_B82462-G4472-M
C32 10 nF
C33 4.7 nF
R37 100
C26 0.1uF
TP10
-10V
U16
-VA
VA-
DOUT
J2
D1
D2
D3
D4
R43 47
R46 47
R73 100k
R74 100k
R75 100k
R76 100k
R77 100k
R78 100k
R79 100k
R80 100k
R81 100k
R82 100k
R83 100k
R84 100k
R85 100k
R86 100k
R87 100k
R88 100k
R89 100k
R90 100k
R91 100k
R92 100k

REVISION HISTORY		
REV	ENGINEERING CHANGE NUMBER	APPROVED

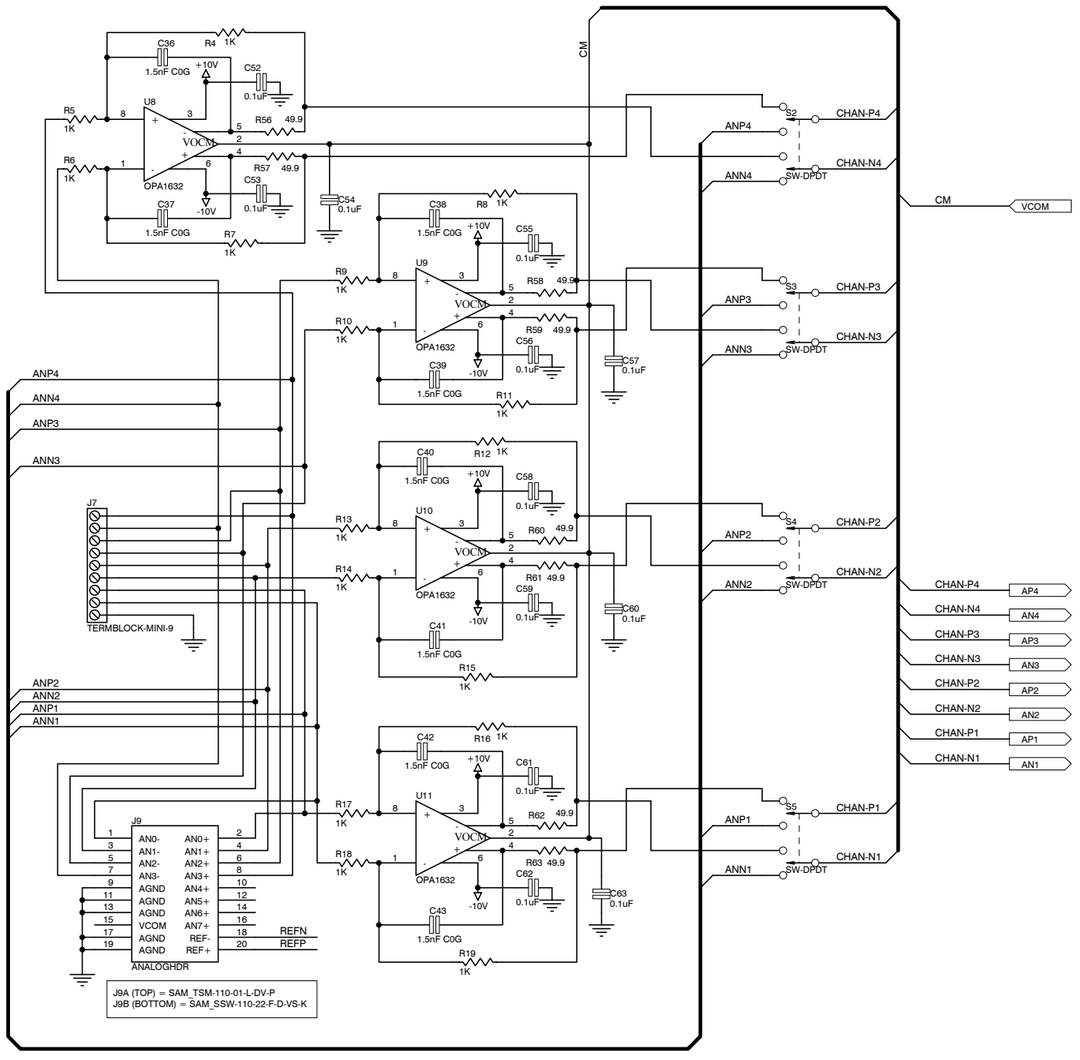

ENGINEER	**RUSSELL ANDERSON**
DRAWN BY	**RUSSELL ANDERSON**
DOCUMENT CONTROL NO.	**6492533**
SHEET	**2** OF **2**

TEXAS INSTRUMENTS

DATA ACQUISITION PRODUCTS
HIGH-PERFORMANCE ANALOG DIVISION
SEMICONDUCTOR GROUP

6730 SOUTH TUCSON BLVD., TUCSON, AZ 85706 USA

TITLE **ADS1274EVM**

SIZE **B** | DATE **29 AUG 2008** | REV **B**

FILE

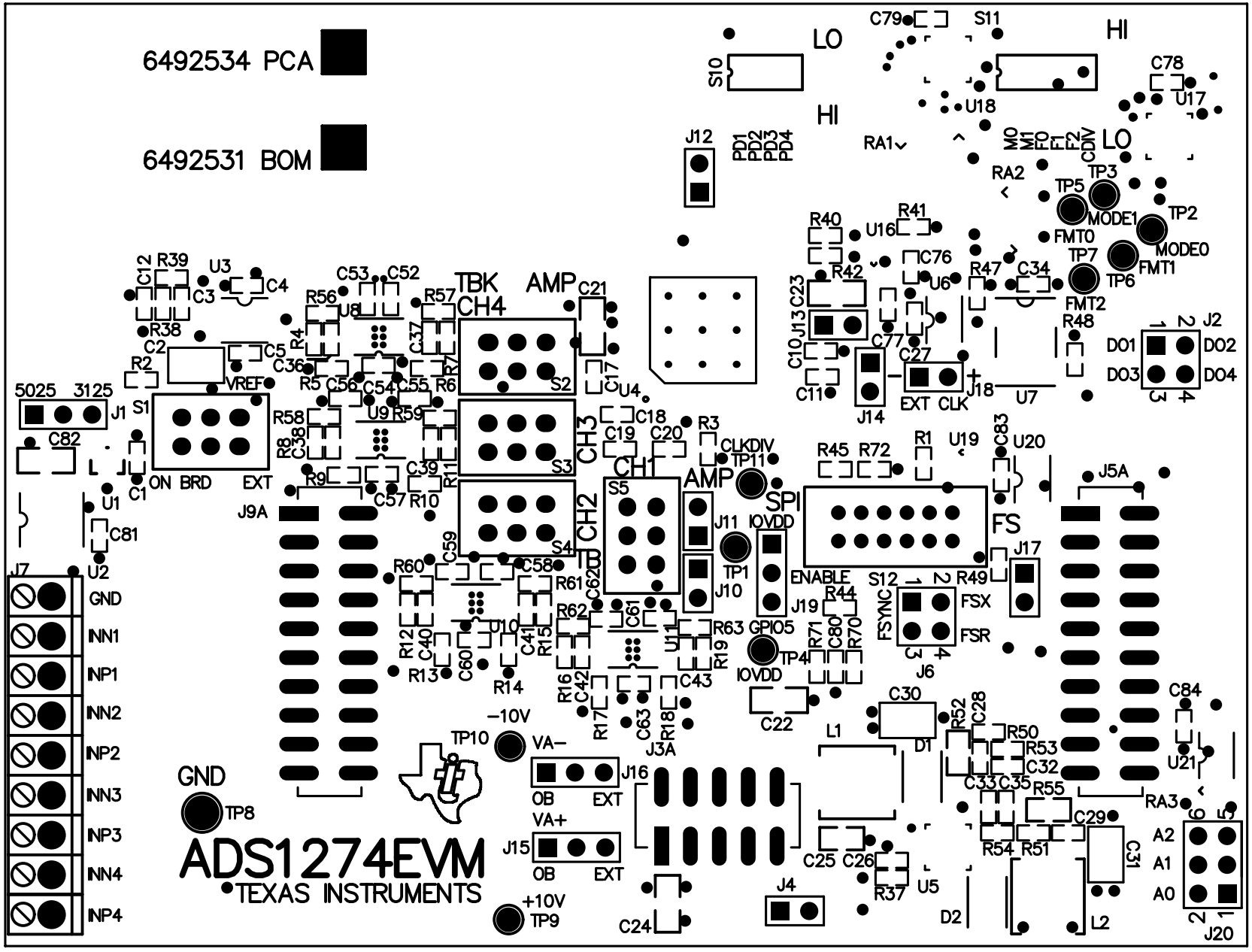
6492534 PCA
6492531 BOM
ADS1274EVM
TEXAS INSTRUMENTS
GND
INN1
INP1
INN2
INP2
INN3
INP3
INN4
INP4
TBK
AMP
CH4
CH3
CH2
CH1
TB
SPI
FS
ENABLE
FSYNC
FSX
FSR
IOVDD
CLKDIV
GPIO5
VREF
ON BRD
EXT
VA−
VA+
OB
−10V
+10V
LO
HI
MODE1
MODE0
FMT0
FMT1
FMT2
CLK
DO1
DO2
DO3
DO4
A2
A1
A0

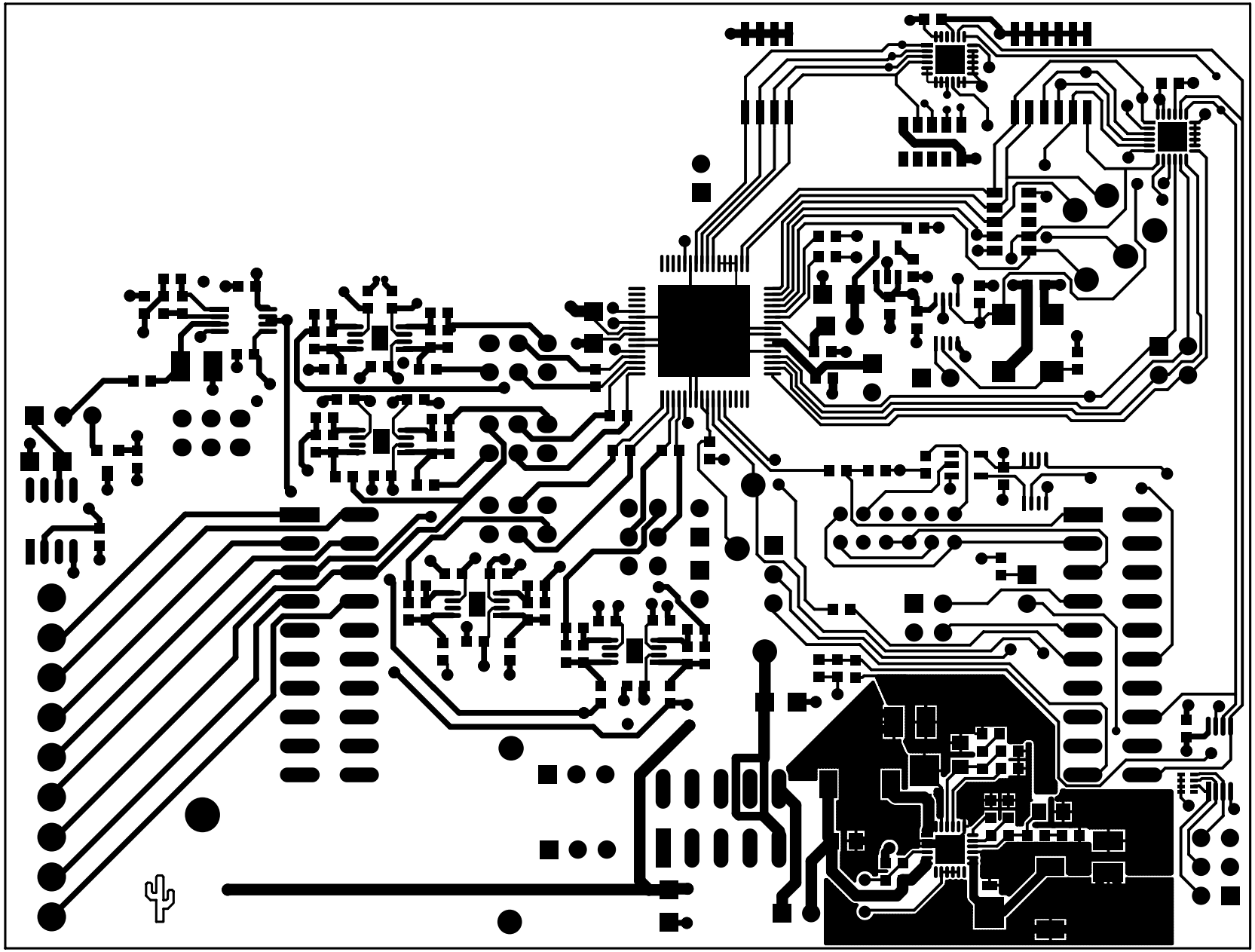

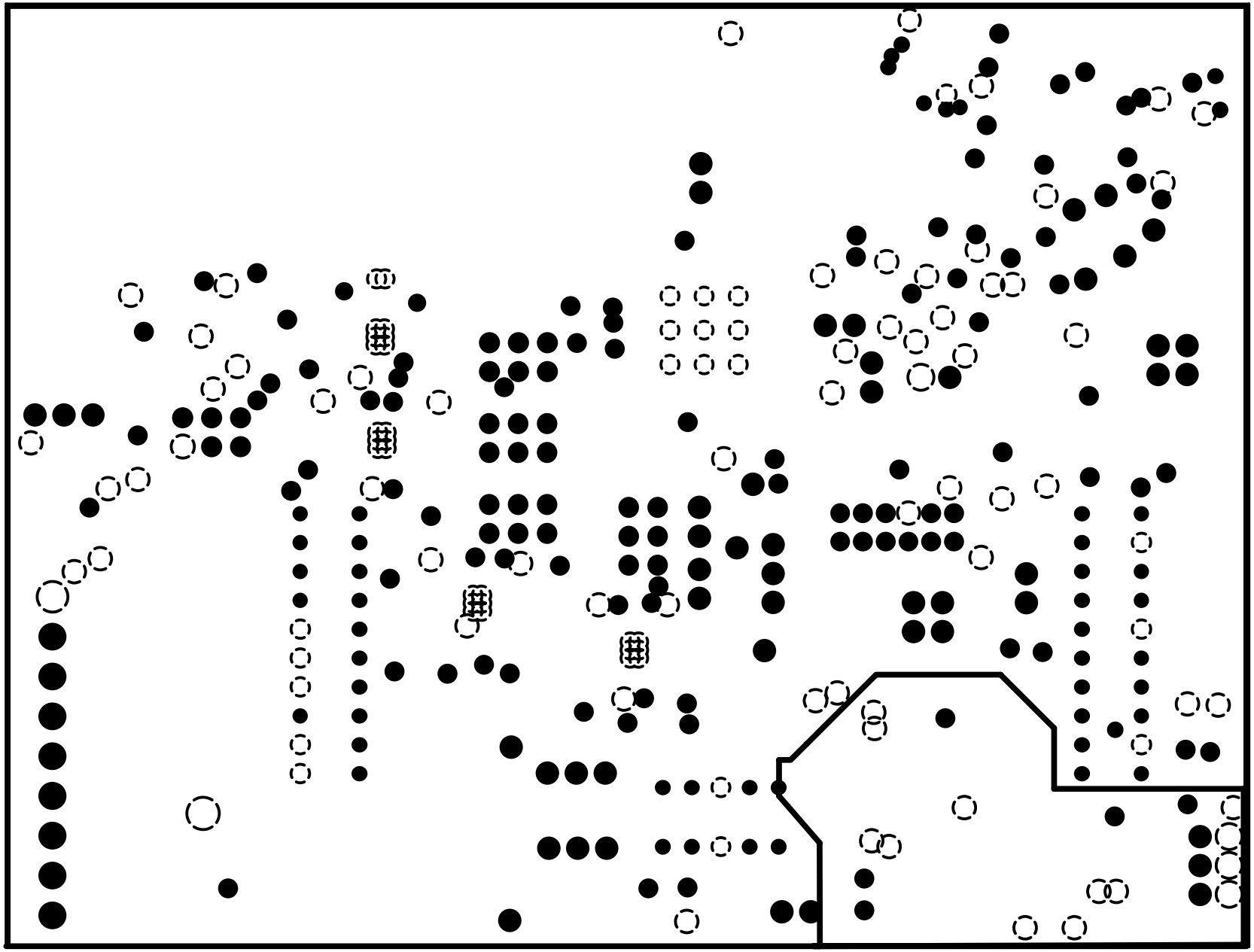

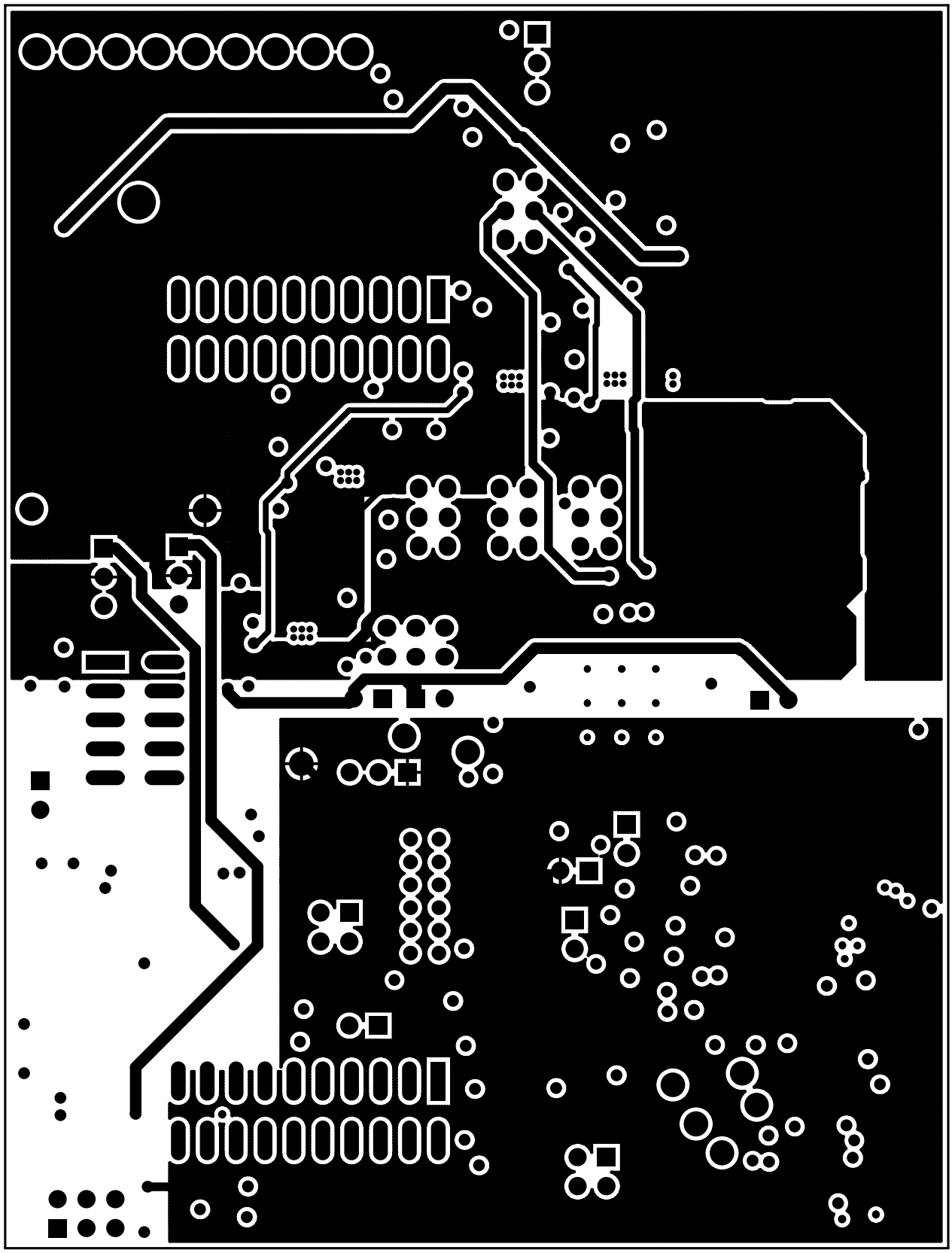

6492531 PWB B

C9
C7
C8
C3
19B
15B
13B

EVALUATION BOARD/KIT IMPORTANT NOTICE

Texas Instruments (TI) provides the enclosed product(s) under the following conditions:

This evaluation board/kit is intended for use for **ENGINEERING DEVELOPMENT, DEMONSTRATION, OR EVALUATION PURPOSES ONLY** and is not considered by TI to be a finished end-product fit for general consumer use. Persons handling the product(s) must have electronics training and observe good engineering practice standards. As such, the goods being provided are not intended to be complete in terms of required design-, marketing-, and/or manufacturing-related protective considerations, including product safety and environmental measures typically found in end products that incorporate such semiconductor components or circuit boards. This evaluation board/kit does not fall within the scope of the European Union directives regarding electromagnetic compatibility, restricted substances (RoHS), recycling (WEEE), FCC, CE or UL, and therefore may not meet the technical requirements of these directives or other related directives.

Should this evaluation board/kit not meet the specifications indicated in the User's Guide, the board/kit may be returned within 30 days from the date of delivery for a full refund. THE FOREGOING WARRANTY IS THE EXCLUSIVE WARRANTY MADE BY SELLER TO BUYER AND IS IN LIEU OF ALL OTHER WARRANTIES, EXPRESSED, IMPLIED, OR STATUTORY, INCLUDING ANY WARRANTY OF MERCHANTABILITY OR FITNESS FOR ANY PARTICULAR PURPOSE.

The user assumes all responsibility and liability for proper and safe handling of the goods. Further, the user indemnifies TI from all claims arising from the handling or use of the goods. Due to the open construction of the product, it is the user's responsibility to take any and all appropriate precautions with regard to electrostatic discharge.

EXCEPT TO THE EXTENT OF THE INDEMNITY SET FORTH ABOVE, NEITHER PARTY SHALL BE LIABLE TO THE OTHER FOR ANY INDIRECT, SPECIAL, INCIDENTAL, OR CONSEQUENTIAL DAMAGES.

TI currently deals with a variety of customers for products, and therefore our arrangement with the user **is not exclusive.**

TI assumes **no liability for applications assistance, customer product design, software performance, or infringement of patents or services described herein.**

Please read the User's Guide and, specifically, the Warnings and Restrictions notice in the User's Guide prior to handling the product. This notice contains important safety information about temperatures and voltages. For additional information on TI's environmental and/or safety programs, please contact the TI application engineer or visit www.ti.com/esh.

No license is granted under any patent right or other intellectual property right of TI covering or relating to any machine, process, or combination in which such TI products or services might be or are used.

FCC Warning

This evaluation board/kit is intended for use for **ENGINEERING DEVELOPMENT, DEMONSTRATION, OR EVALUATION PURPOSES ONLY** and is not considered by TI to be a finished end-product fit for general consumer use. It generates, uses, and can radiate radio frequency energy and has not been tested for compliance with the limits of computing devices pursuant to part 15 of FCC rules, which are designed to provide reasonable protection against radio frequency interference. Operation of this equipment in other environments may cause interference with radio communications, in which case the user at his own expense will be required to take whatever measures may be required to correct this interference.

EVM WARNINGS AND RESTRICTIONS

It is important to operate this EVM within the input voltage range of 3.3V to 5V and the output voltage range of 0V to 5V.

Exceeding the specified input range may cause unexpected operation and/or irreversible damage to the EVM. If there are questions concerning the input range, please contact a TI field representative prior to connecting the input power.

Applying loads outside of the specified output range may result in unintended operation and/or possible permanent damage to the EVM. Please consult the EVM User's Guide prior to connecting any load to the EVM output. If there is uncertainty as to the load specification, please contact a TI field representative.

During normal operation, some circuit components may have case temperatures greater than 30°C. The EVM is designed to operate properly with certain components above 85°C as long as the input and output ranges are maintained. These components include but are not limited to linear regulators, switching transistors, pass transistors, and current sense resistors. These types of devices can be identified using the EVM schematic located in the EVM User's Guide. When placing measurement probes near these devices during operation, please be aware that these devices may be very warm to the touch.

Mailing Address: Texas Instruments, Post Office Box 655303, Dallas, Texas 75265
Copyright © 2009, Texas Instruments Incorporated

IMPORTANT NOTICE

Texas Instruments Incorporated and its subsidiaries (TI) reserve the right to make corrections, modifications, enhancements, improvements, and other changes to its products and services at any time and to discontinue any product or service without notice. Customers should obtain the latest relevant information before placing orders and should verify that such information is current and complete. All products are sold subject to TI's terms and conditions of sale supplied at the time of order acknowledgment.

TI warrants performance of its hardware products to the specifications applicable at the time of sale in accordance with TI's standard warranty. Testing and other quality control techniques are used to the extent TI deems necessary to support this warranty. Except where mandated by government requirements, testing of all parameters of each product is not necessarily performed.

TI assumes no liability for applications assistance or customer product design. Customers are responsible for their products and applications using TI components. To minimize the risks associated with customer products and applications, customers should provide adequate design and operating safeguards.

TI does not warrant or represent that any license, either express or implied, is granted under any TI patent right, copyright, mask work right, or other TI intellectual property right relating to any combination, machine, or process in which TI products or services are used. Information published by TI regarding third-party products or services does not constitute a license from TI to use such products or services or a warranty or endorsement thereof. Use of such information may require a license from a third party under the patents or other intellectual property of the third party, or a license from TI under the patents or other intellectual property of TI.

Reproduction of TI information in TI data books or data sheets is permissible only if reproduction is without alteration and is accompanied by all associated warranties, conditions, limitations, and notices. Reproduction of this information with alteration is an unfair and deceptive business practice. TI is not responsible or liable for such altered documentation. Information of third parties may be subject to additional restrictions.

Resale of TI products or services with statements different from or beyond the parameters stated by TI for that product or service voids all express and any implied warranties for the associated TI product or service and is an unfair and deceptive business practice. TI is not responsible or liable for any such statements.

TI products are not authorized for use in safety-critical applications (such as life support) where a failure of the TI product would reasonably be expected to cause severe personal injury or death, unless officers of the parties have executed an agreement specifically governing such use. Buyers represent that they have all necessary expertise in the safety and regulatory ramifications of their applications, and acknowledge and agree that they are solely responsible for all legal, regulatory and safety-related requirements concerning their products and any use of TI products in such safety-critical applications, notwithstanding any applications-related information or support that may be provided by TI. Further, Buyers must fully indemnify TI and its representatives against any damages arising out of the use of TI products in such safety-critical applications.

TI products are neither designed nor intended for use in military/aerospace applications or environments unless the TI products are specifically designated by TI as military-grade or "enhanced plastic." Only products designated by TI as military-grade meet military specifications. Buyers acknowledge and agree that any such use of TI products which TI has not designated as military-grade is solely at the Buyer's risk, and that they are solely responsible for compliance with all legal and regulatory requirements in connection with such use.

TI products are neither designed nor intended for use in automotive applications or environments unless the specific TI products are designated by TI as compliant with ISO/TS 16949 requirements. Buyers acknowledge and agree that, if they use any non-designated products in automotive applications, TI will not be responsible for any failure to meet such requirements.

Following are URLs where you can obtain information on other Texas Instruments products and application solutions:

Products		**Applications**	
Amplifiers	amplifier.ti.com	Audio	www.ti.com/audio
Data Converters	dataconverter.ti.com	Automotive	www.ti.com/automotive
DLP® Products	www.dlp.com	Broadband	www.ti.com/broadband
DSP	dsp.ti.com	Digital Control	www.ti.com/digitalcontrol
Clocks and Timers	www.ti.com/clocks	Medical	www.ti.com/medical
Interface	interface.ti.com	Military	www.ti.com/military
Logic	logic.ti.com	Optical Networking	www.ti.com/opticalnetwork
Power Mgmt	power.ti.com	Security	www.ti.com/security
Microcontrollers	microcontroller.ti.com	Telephony	www.ti.com/telephony
RFID	www.ti-rfid.com	Video & Imaging	www.ti.com/video
RF/IF and ZigBee® Solutions	www.ti.com/lprf	Wireless	www.ti.com/wireless

Mailing Address: Texas Instruments, Post Office Box 655303, Dallas, Texas 75265
Copyright © 2009, Texas Instruments Incorporated