85NS / 85NSR

SILICON POWER DIODE

NSL NAINA

DO-5

FEATURES
- Diffused Series
- Available in Normal & Reverse Polarity
- Industrial Grade
- Available In Avalanche Characteristic

85 NS / NSR

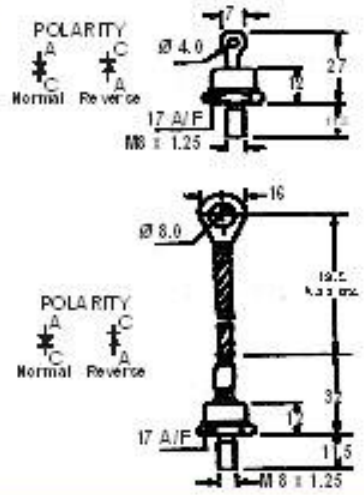

ELECTRICAL SPECIFICATIONS

I_F	Maximum Average Forward Current T=125°C	85A
V_{FM}	Maximum peak forward voltage drop @ Rated IF(AV)	1.4V
I_{FSM}	Maximum peak one cycle (non-rep) surge current 10 m sec	1270 A
I_{FRM}	Maximum peak repetitive surge current	405 A
I^2t	Maximum I^2t rating (non-rep.) for 5 to 10 msec.	8064 A^2 Sec

THERMAL MECHANICAL SPECIFICATIONS

θ_{JC}	Maximum thermal resistance Junction to case	0.50°C/W
Tj	Operating Junction Temp.	-65°C to 150°C
Tstg	Storage temperature	-65°C to 200°C
	Mounting torque (Non-lubricated threads)	0.4 M-kg min, 0.6 M-kg max
W	Approx, weight	13.5 & 30 gms.

ELECTRICAL RATINGS

TYPE	85NS/NSR	10	20	40	60	80	100	120	140	160
V_{RRM}	Max. repetitive peak reverse voltage (V)	100	200	400	600	800	1000	1200	1400	1600
V_R(RMS)	Max. R.M.S. reverse voltage(V)	70	140	280	420	560	700	840	980	1120
V_R	Max. D.C. Blocking Voltage (V)	100	200	400	600	800	1000	1200	1400	1600
	Recommended R.M.S. working Voltage(v)	40	80	160	240	320	400	480	560	640
I_R(AV)	Max. Average reverse leakage current @ VRRM Tc 25°C uA	200	200	200	200	200	200	200	200	200